Internship Report

DESIGN OF BAGMAKING EQUIPMENT

Klaas-Jan Gunnink (s0180912)
k.gunnink@student.utwente.nl

July 9, 2012

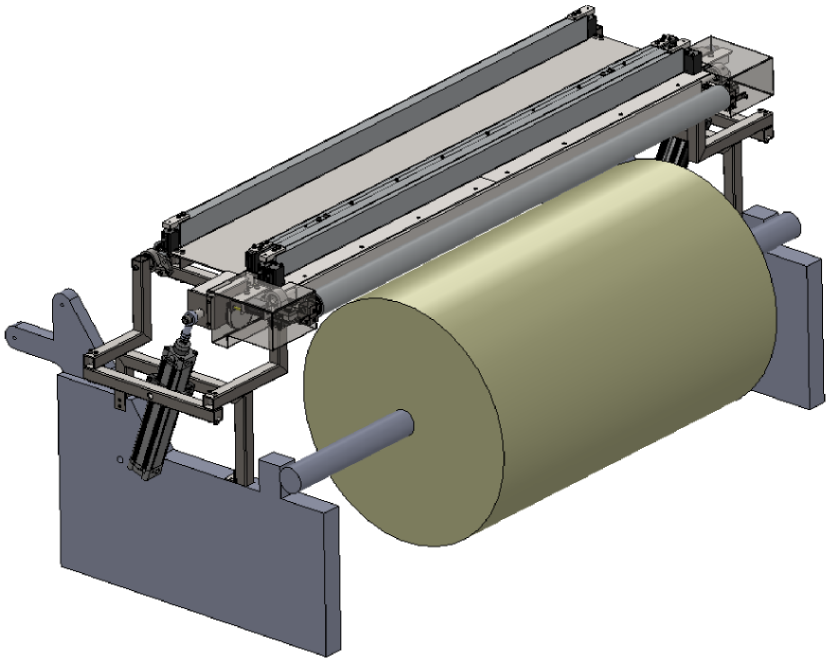

SAFEPAK

UNIVERSITY OF TWENTE.

Internship report

Design of bagmaking equipment

Klaas-Jan Gunnink (s0180912)
Mechanical Automation, CTW
13-02-2012 – 11-05-2012

Safepak (Pty) Ltd
16 Old Mill Road
N'dabeni, 7405
Cape Town
South Africa

Supervisor:
Grant Thorburn
grant@safepak.co.za

University of Twente
PO Box 217
7500 AE Enschede
The Netherlands

Academic supervisor:
Dr. ir. R.G.K.M. Aarts
r.g.k.m.aarts@ctw.utwente.nl

Contents

Chapter 1

Preface

Between February 13 and May 11, 2012, I have been working as an intern at Safepak (Pty) Ltd. Safepak is a packaging company located in Cape Town, South Africa. Various high quality flexible packaging products such as food bags and shrink wrap foil are produced for several clients.

This internship is part of my master mechanical engineering at the University of Twente in Enschede, The Netherlands. The program of this master consists of one year of courses which focus on mechanical automation, this internship of three months and a graduation project of 9 months.

During the internship, I have been supervised by Grant Thorburn, the factory manager of Safepak. He gave me various smaller and larger projects regarding the (re-)design and improvement of parts and machines in the factory. During the first few weeks of my internship, I got to know Safepak by working on a folding station and improvements for punches and a sealing station. Furthermore, I designed the mechanical part of a film tension control system for an unwind station and investigated the feasibility of buying an automatic core joining system for the reel cores. Subsequently, some knowledge about electrical components and soldering was gained when i made opto-couplers to split electrical circuits and prevent machine drives from blowing. The second half of my internship was mainly spent working on a new splicing station for the slitting department. Working on all these projects gave me a lot of practical experience. The theoretical side is learned when studying at the university, but the last step of actually implementing a design or machine is not treated. This period of practical training improved my skills in making 3D models for machines, making technical drawings and selecting bearings and pneumatic components. Furthermore, I discussed designs and practical issues with the workshop staff. Finally, working in a company helped me to improve my communicating skills during talks with management and other staff and suppliers. I also improved my knowledge of the English language.

Concluding, this internship at Safepak was a great experience. I developed my engineering skills and learned a new culture, whih is on some points quite different than the Dutch culture. I would like to express my deepest gratitude to Grant Thorburn. He helped me greatly during our many discussions by showing me shortfalls in the design, suggesting improvements and sharing his knowledge and experience on mechanical and electrical engineering and designing factory equipment in this culture. Furthermore, he took me to suppliers and clients to broaden my view and get more practical insight. Besides all this, I also would like to thank him for his enthousiasm both inside and outside working hours. I have been invited to his house and on trips in the Cape Town area with him and his family, which was really nice.

I would also like to express my gratitude to Greg Sayers, head of the workshop, for his feedback and advice on the designs, Ashley Solomon for sharing his office with me during these 3 months and Tom Eller, fellow student at the University of Twente, for giving me the first contact with Safepak.

Chapter 2

Introduction

This chapter provides a short overview of Safepak's activities and production facilities. Subsequently, the various projects which will be discussed in the rest of this report are introduced.

2.1 Producing flexible packaging materials

The production of the bags and reels at Safepak is split up in three steps:

1. Blow extrusion
2. Printing
3. Conversion, wicketing and/or slitting

In a number of blow extrusion machines (see figure 2.1), various resin blends are formulated for each job to create film with the appropriate density, strength and elasticity. This creates reels with plastic film in the appropriate size.

Subsequently, the film is printed. This can be done with a single color or up to eight colors to make a full color print. The printed reels are then sent to one of the final production steps.

In conversion and wicketing, bags are made by folding, sealing and cutting the printed film. Holes and perforations can also be punched in the bags and zippers or hangers can be attached.

In the slitting department, larger reels can be split in smaller reels of for example shrink wrap. Many different sizes of reels (film widths) can be the end result. The slitting department also trims edges of the film and can rewind reels if this is necessary for printing or conversion.

2.2 Splicing station

The main part of this report discusses the design of a semi-automatic splicing station for the slitting department, see figure 2.2. Chapter 3 first discusses the current way of splicing and subsequently a description of the final design of the splicing station is given. Chapter 4 then treats some of the subassemblies in more detail. First, the moving clamp is discussed. Next, the flying knife system and third the sealing bar with vacuum clamp.

Figure 2.1: Extrusion department. Blow extrusion creates a tube-shaped balloon (vertical, right side of machines) which is cut to form two pieces of film.

Figure 2.2: Slitting department on the left. The splicing station is designed for the large machine in the front. To the right of the path some of the smaller printing machines can be found

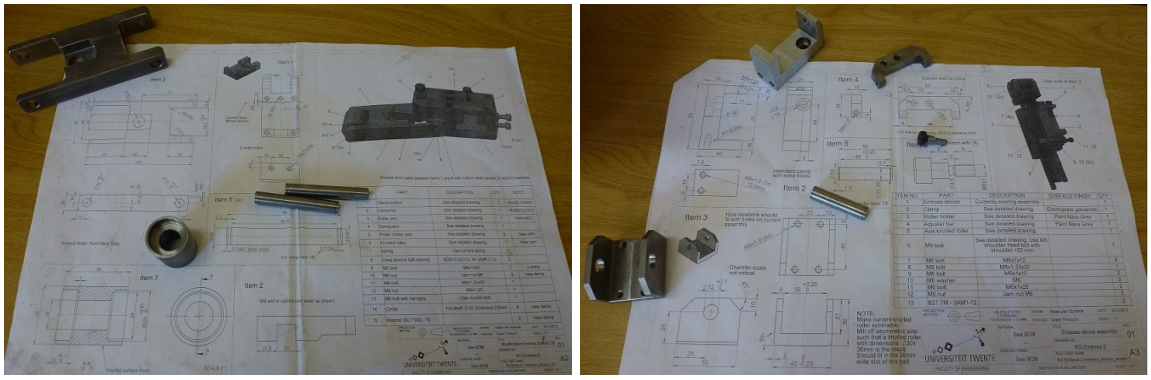

(a) Emboss device for C6

(b) Emboss device for C10

Figure 2.3: Emboss devices. These are used to create a rough surface on part of the film, making it easier for the customer to open and fill the bag. Without the roughness, the bag sticks together due to static electricity in the plastic.

2.3 Smaller projects

In the first weeks of the internship, smaller projects were done. These will be described shortly in chapter 5. First, the tension control system for the unwinder of conversion machine C20 is discussed. Next, the redesigns of the folding and sealing stations are treated.

Besides these projects, I have also made a feasibility analysis for the purchase or production of a reel core joining station. The commercially available machines for this turned out to be too expensive for use at Safepak. Furthermore, quite some time was spent (re-)designing parts for hole punches and two devices to create an embossing on the film. For these latter devices, see figure 2.3 for some manufacturing drawings and produced parts.

Chapter 3

Splicing station

The main project of the internship is the design of a new semi-automatic splicing station for machine S1 in the slitting department. In this chapter, the process and purpose of splicing is explained first. Then the current, manual, way of splicing is explained and subsequently the final design of the splicing station is presented. This creates a basic knowledge of the components of the machine, after which the various subassemblies will be explained in the following chapters.

3.1 Splicing: purpose and procedure

Splicing is the process of fixing two ends of film together and cutting away the waste ends. This process is necessary for producing reels of film with the requested size. Reels can be combined to create a larger end product (longer film on a single reel) and bad pieces of plastic or print errors can be removed by cutting away a few meters of film.

The joint of the two film ends needs to be at the right location and should be small and neat such that the customer hardly notices that it is there. Therefore, the joint should be an overlap seal instead of a lip seal, see figure 3.1. The lip will always be noticable in the film, while the overlap seal is hardly visible when the waste ends are trimmed as short as possible. The process of creating an overlap seal is however more complicated, since both waste ends are located on opposite sides of the joined film. Some tests that were done using a manual sealing bar, showed that using the sealing bar as a cutting device (like on the machines in conversion) did not result in proper seals. A strong seal could only be made in the form of a lip seal. When an overlap seal was made, pulling away the waste ends resulted in tearing apart the seal. Therefore, creating an overlap seal requires a separate cutting system for removal of the waste ends.

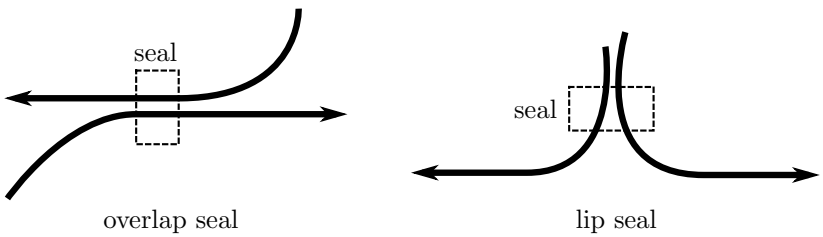

Figure 3.1: A film splice: overlap seal versus lip seal

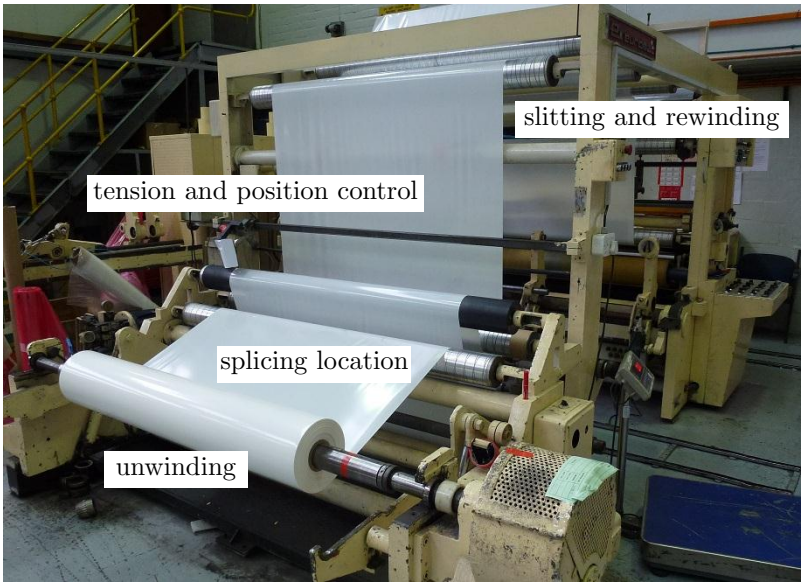

Figure 3.2: Machine S1.

3.2 Current manual splicing procedure

Figure 3.2 shows the slitting process. The film is webbed through the machine. After unwinding the reel with blank or already printed film, some rollers and sensors make sure the film is located correctly and tension in the film remains constant. On the other side of the machine, the film is rewinded and optionally, knives can trim away sides of the film and/or slit the film in several smaller reels. A splice is required when the operator notices a bad part in the film or when the front reel is empty.

The procedure for the manual splice is as follows: first, the operator stops the machine and cuts the film at the 'splicing location'. Then he removes the bad piece of film or loads the new reel.

Figure 3.3: Movable sealing bar

After the piece of the film that is still in the rest of S1 (from now on called 'tail end') and the new piece of film (called 'head end') are aligned, he can make the seal using the movable sealing bar, see figure 3.3. Both films are located on the bar and when pushing down the top bar, the sealing wire (a resistance wire) is heated for a certain time to create the seal. Afterwards, he uses the knife again to cut away both waste ends.

This manual procedure is inconvenient, because several movable tools are required. It is also quite time-consuming (several minutes) and asks for a lot of focus from the operator. Therefore, the design of a (semi-)automatic splicing station is the task I was given. A quick and easy to make splice of constant quality is the goal.

3.3 Overview of the splicing station

This section presents the final design of the splicing station. Furthermore, some general design considerations are explained. The next chapter describes some of the subassemblies in more detail.

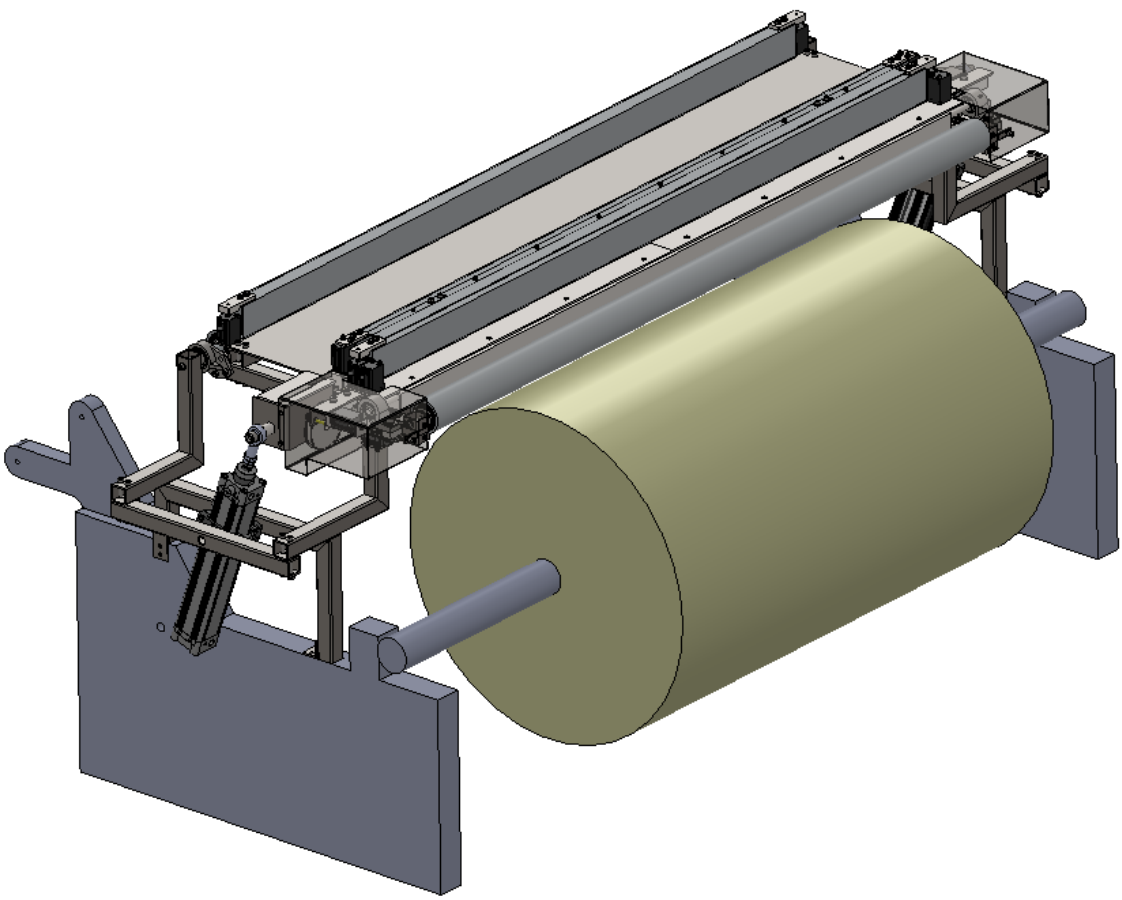

Figure 3.4: Final design of the splicing station, mounted on S1.

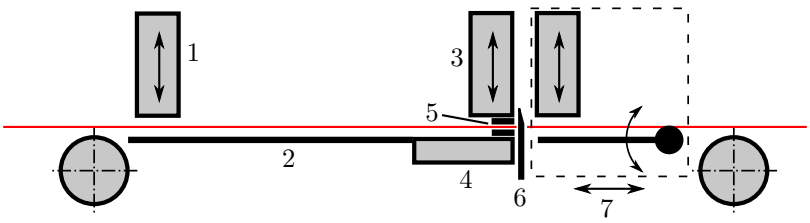

Figure 3.5: Schematic overview of the splicing station

Figure 3.4 shows the final design. Comparing this model with machine S1 as shown in figure 3.2, it can be seen that the grey sidepanels are the part of S1 on which the new machine will be mounted, i.e. the 'splicing location'. A full reel of film (diameter 750mm) is included for comparison. The main dimensions of the splicing station (excluding the mounting frames) are 2200x600x225mm. Films up to a width of 1790mm (maximum width allowable in S1) can be used in the splicing station. However, since the machine is mainly used for a single customer, the splicing station is designed for film widths up to 1200 mm. The design is made such that this can be upscaled with minimal effort and extra parts.

In order to explain the working principle more clearly, a schematic overview of the machine is shown in figure 3.5. The following procedure is used for creating the splice:

1. At the moment a splice is required, the slitting machine S1 is stopped. The film is aligned at the correct location for the splice and the 'back clamp' (1) is closed to fix the tail end.
2. The so-called 'flying knife' (6) is used to cut the waste of the tail end. The operator removes this material.
3. The operator loads the new reel or removes the bad piece of material in the current reel. The head end is aligned on the 'align plate' (2) with the tail end and fixed using the 'moving clamp' (7).
4. In order to create an overlap seal while using only one flying knife, the head end of the film needs to be moved. Therefore, the moving clamp is retracted (moved to the right in figure 3.5).
5. The flying knife cuts the head end of the film. The operator removes the waste.
6. When the moving clamp returns to its original location, an overlap of the two films is created. In order to prevent the tail end from moving, a 'vacuum clamp' (4) is used. This fixes the tail end close to the cut-location. Furthermore, the moving clamp is lifted such that the head end is really put on top of the tail end.
7. The 'sealing bar' (3) is lowered to clamp both films and the 'sealing wires' (5) (two wires, one on the vacuum clamp and one on the sealing bar) are heated to seal the two pieces of film together.
8. All clamps are released and slitting operation can continue. The webbing of the film is over the two rollers on both front and back end of the splicing station. With all clamps up, the film does not touch any of the machine parts besides of course the two rollers.

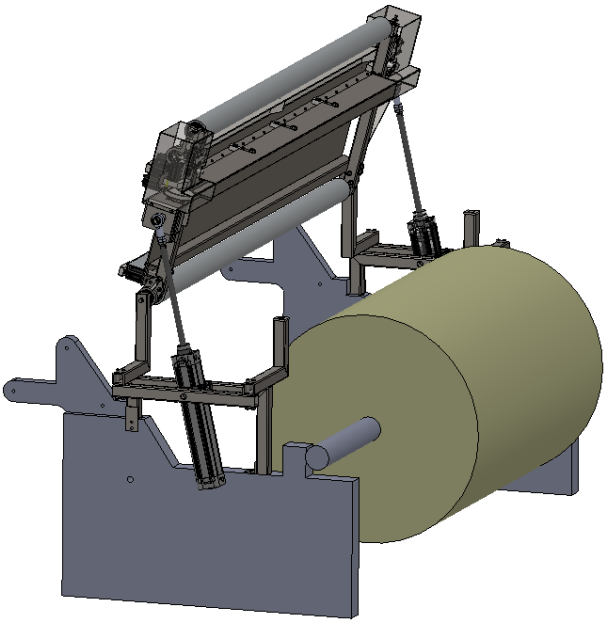

Figure 3.6: Splicing station in lifted position

From figure 3.4 it can be seen that the mounting of the complete splicing station includes two large pneumatic cylinders. Figure 3.6 shows the splicing station in upward position. The entire splicing station can be hinged upwards so that a new reel can easily be loaded onto S1. Besides this, sometimes a paper reel with a larger diameter is treated on this slitting machine. The splicing station is not needed for paper, and can be moved out of the way to give access to this larger reel. Locator pins and automatically locking cylinders ensure the safety and fixed position of the splicing station in both lifted and normal configuration.

The splicing station will be controlled using a PLC. Due to time restrictions, the programming of this PLC could not be done during my internship. The logic for programming the PLC however designed, similar to the working procedure as described above.

Chapter 4

Splicing station subassemblies

Now the final design of the splicing station is presented, this chapter describes some of the subassemblies in more detail. First, the flying knife is explained. This subassembly is used to trim the pieces of film to the right sizes. Second, the moving clamp subassembly, which enables the creation of an overlap seal, is discussed. Third, the sealing bars and vacuum clamp are treated. The sealing bars create the actual seal and the vacuum clamp is used to ensure the correct alignment of the film so that a proper splice can be made.

A general remark for the design of all components and (sub-)assemblies is that as much as possible and desirable, standard items and profiles are used. So, metal frame parts etc. are made of angle irons or (square) tubes. Only when an other solution is not easier, milled parts are used. Furthermore, standard bearings and cylinders are incorporated in the designs.

4.1 Flying Knife

Figure 4.1 shows the splicing station, viewed from the rear. All but the flying knife subassembly and both side frames are hidden to make the flying knife visible.

A so-called flying knife is a knife blade attached to a belt. This belt is supported by a pulley driven by a servo motor, a tensioner pulley and three idle pulleys. On the top, a nylon knife blade guide makes sure that the knife blade stays vertical and stable. This belt driven system is used

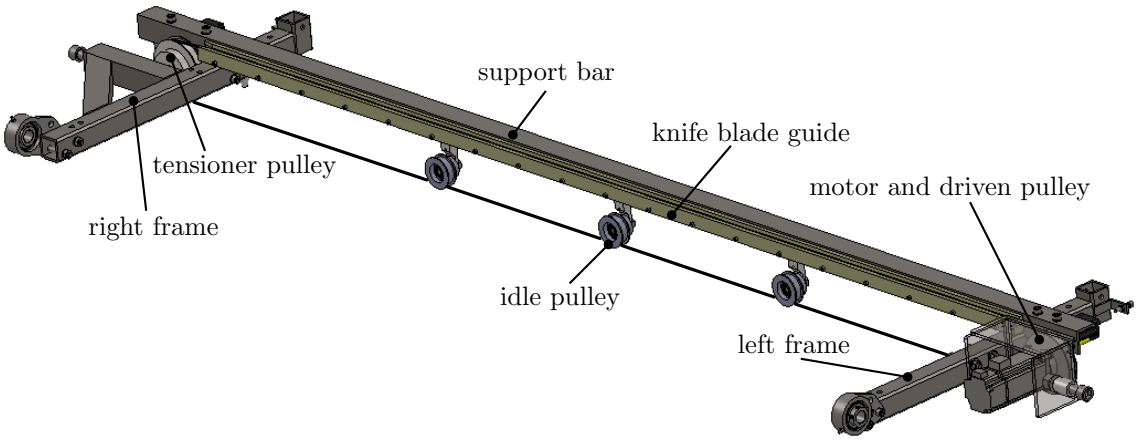

Figure 4.1: Flying knife subassembly, viewed from the back of the machine

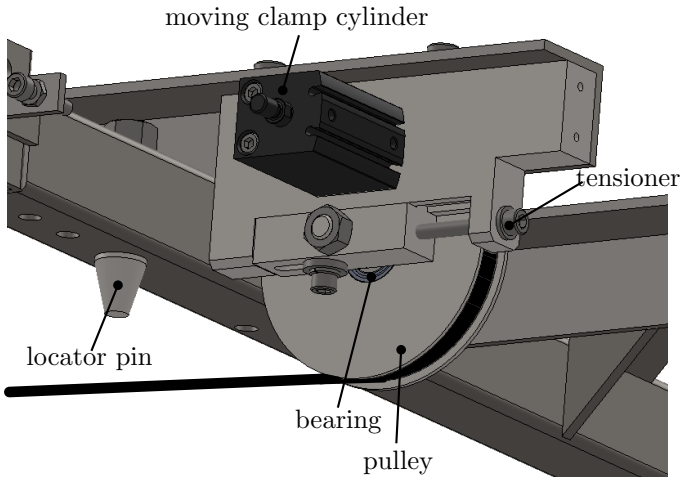

Figure 4.2: Belt tensioning system

because of the large stroke that is required, namely about 1.8m. An alternative would be a knife attached to a pneumatic cylinder. Cylinders of this size are however very expensive. Since this flying knife system was already used somewhere else in the factory, it was decided that the splicing station would use this as well. Another reason for using this system is the ease of control: when a servo motor and a few proximity sensors are used, the speed and position of the knife are easy to control. The motor that is used is an ECMA-C10604ES servo motor of 400W from supplier Delta Electronics. The motor will be driven by an ASD-A2-0421 servo drive. The selection of these parts is based on the knowledge and experience of Grant Thorburn, in collaboration with the supplier. The complete frame size is designed to fit with a belt of type 1700H with a length of 4318mm. The H describes the type of belt, namely a timing belt with teeth of a half inch long.

The splicing station is built using two side frames, made of 40x40x4m square tube profiles. The small vertical tubes on the front side provide support for the front roller at the correct height. Between these side frames, the other subassemblies are fixed. The flying knife uses a 40x4 mm angle iron as supporting bar. The knife blade guide and idle pulleys are fixed between the two side frames. On the left frame side, a proximity sensor is located to provide a 'end-of-stroke' signal. On the right frame side, a tensioning system is used to ensure the tension of the belt.

Figure 4.2 shows a detailed view of this subassembly. The technical drawing of this subassembly can be found in the appendix. The following parts are of importance: two Bright Mild Steel blocks for the tensioner and its base and a shaft for the pulley. with the use of 2 bolts, the pulley can be moved to put tension on the belt. A bearing selection is done using the geometrical requirements/restrictions, resulting in the choice for the 6000-2Z bearing.

A pneumatic cylinder (Festo ADVC-20-25-A-P-A) is included as well (also on the left frame side) for the moving clamp. The piston rod is attached to the bracket on the 'cart' of the moving clamp. Furthermore, figure 4.2 clearly shows the locator pin, fixed to the frame beam and used to locate the whole splicing station when it is lowered by the main lifting cylinders onto the supporting frames.

For safety purposes, the whole flying knife subassembly should be surrounded by covers. This prevents the operator from being able to hurt himself with the sharp knife which moves at high

speeds. The left and right cover boxes, clearly shown (transparent to enable to view inside) in figure 3.4, are made of 1mm thick sheet metal. The clamping bar of the moving clamp and the sealing bar (with top cover, see figure 4.4) form the top part of the cover. Finally, on the bottom side of the splicing station, a 1mm thick sheet metal cover is mounted as well (see figure 3.6). In the control system of the splicing station, safety checks will be included as well. For example, the knife should have passed the 'end-of-stroke' proximity sensor and the motor should have stopped (and power to it cut), before the clamping and sealing bar can move upwards to give access for feeding a piece of film or repairing something.

4.2 Moving Clamp

Figure 4.3 shows a zoomed view of the right side of the moving clamp subassembly. Its use and the design of the various parts is explained in this section.

In order to create an overlap seal (see section 3.1), the head end of the film must be placed on top of the tail end. When a single cutting system (the flying knife) is used, this head end must be moved: after aligning (which is also the final position of the film), the film must be retracted exactly the amount of overlap that is required. Subsequently, the film can be cut and afterwards, the film must be put back on top of the tail end. This procedure is done using the moving clamp. The movement back and forward is done with two pneumatic cylinders, on both sides of the assembly. See figure 4.2. The piston rod is attached to the angle iron which is bolted to the 'cart', the block

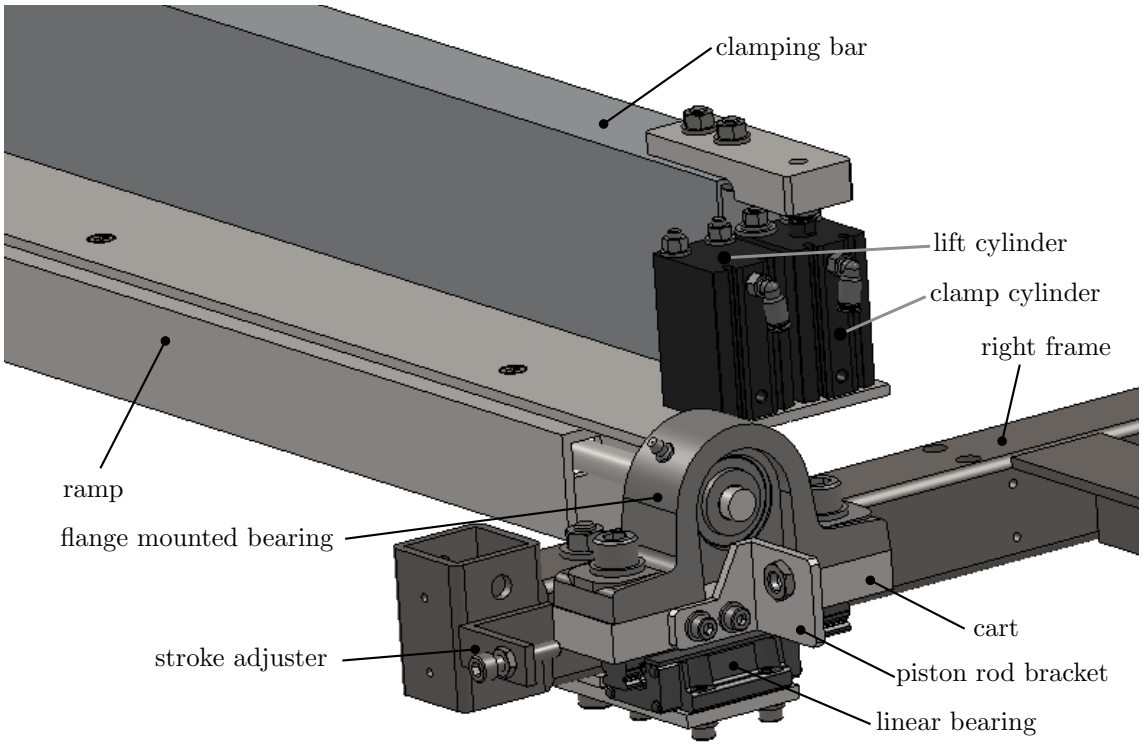

Figure 4.3: Moving clamp subassembly

in between the linear bearing and the flange mounted bearing. The movement is guided by two linear bearings of type MHT15, rail length 100mm. The stroke of the pistons, i.e. the amount of overlap, can be adjusted using the bolts on the front of the frame beams (labeled 'stroke adjuster').

On the whole assembly that moves, the clamping bar is visible. It is the same subassembly as the back clamp (number 1 in figure 3.5) on top of the align plate (2), see also figure 3.4. The bar itself is a 76x38mm aluminium tube of length 1790mm; also used for the sealing bar which is shown in more detail in the next section. This tube is chosen after visiting a local aluminium profile supplier and selecting a few possible options. Subsequently, an analysis of the bending stiffness was made to compare this tube with for example a 100x10 aluminium bar. Taking into account the way the bar is assembled to the other parts, providing some constraints to the size and shape, this tube was finally selected.

The pneumatic cylinder is selected from supplier Festo. This cylinder is of the type ADVC-20-25-A-P-A, which means that the cylinder diameter is 20mm and the stroke 25mm. The other options show that the piston rod has a male thread (A) and the type of cussioning (P) and that slots for a proximity sensor are included in the design (A). This last option enables the mounting of sensors, used for safety checks in the control scheme.

The clamp is mounted on a 1800x100mm plate, labeled 'ramp'. This plate is bolted onto an angle iron with a shaft welded in the corner, supported by some ribs. This ∅12 shaft is supported on both sides by a flange mounted bearing of type UCP201. The purpose of this construction is to lift (using the 'lift cylinder' of type Festo ADVC-20-25-I-P-A, 'I' means female thread end) the edge of the head end of the film about 15mm such that the head end is really placed on top of the tail end. The cylinder pushes against a piece of angle iron bolted to the inside of the cart (not visible in figure 4.3). The size of this angle iron is calculated such that the maximum stroke of the cylinder provides the required height and still allows the clamp to move back and forth under the top knife cover. The bar should namely remain under this knife cover during the full operation for safety issues.

Thus, in summary: after aligning the head end with the tail end, the clamp is closed. Then the moving clamp is retracted after which the film is cut and the waste plastic removed. Subsequently, the ramp is lifted and the moving clamp is moved to its default location again. Finally, the ramp is lowered and an overlap is created.

4.3 Sealing bars and vacuum clamp

In the center of the splicing station, the sealing bars are located (numbers 3 and 4 in figure 3.5). Next to the bottom sealing bar, a vacuum clamp is positioned. Both these systems, shown in figure 4.4 will be discussed in this section.

A support beam connecting the left and right frames is used to hold both the bottom and top sealing bars. All items are bolted together for ease of assembling and maintenance. For the top sealing bar, the same aluminium tube is used as for the back clamp and moving clamp. The same pneumatic cylinders have been used as well. The top knife cover is an aluminium 50x2mm strip, protecting the flying knife from the top even when the moving clamp is retracted. The bottom sealing bar is also the vacuum clamp, discussed later in this section. The bar is 1200mm long, which is currently the maximum width of films processed on the slitting machine.

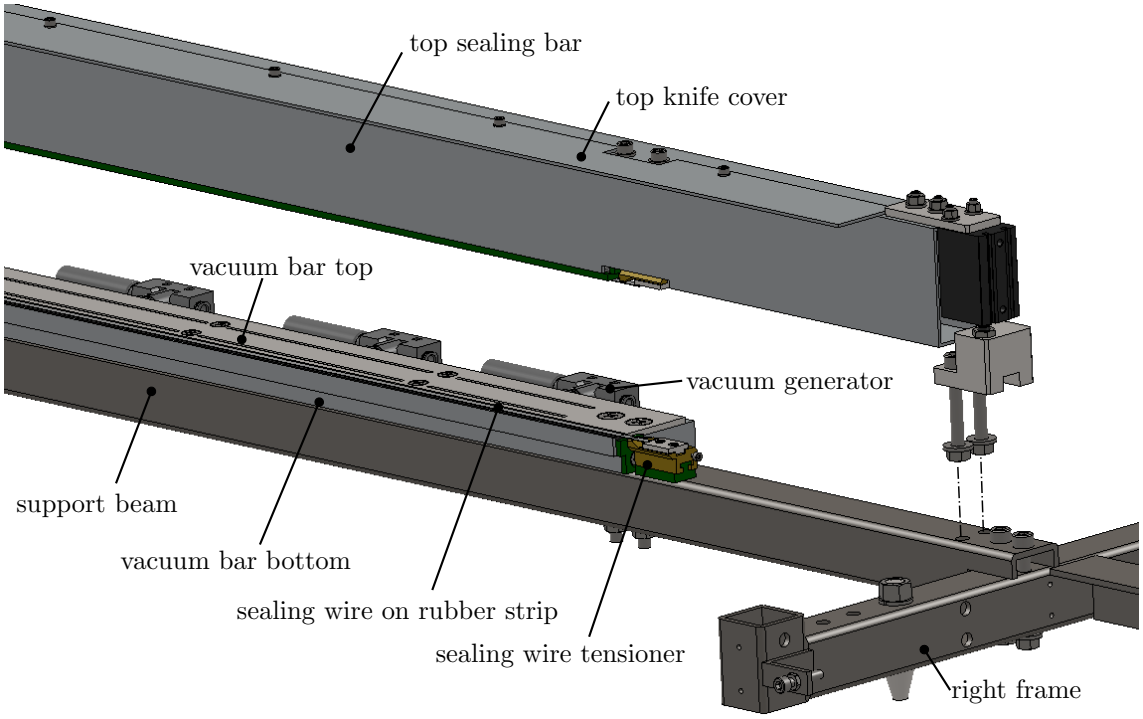

Figure 4.4: Subassembly of sealing bars and vacuum clamp

The sealing of two pieces of film is done by pushing both film pieces together between two resistance wires of 5mm wide and about 0.3mm thick. These wires are heated by putting an electric current through them. Therefore, electrical insulations are used in mounting these wires. In figure 4.4, it can be seen that the bottom sealing wire lies on a rubber strip. The top sealing wire lies on a insulator strip. The rubber makes sure that the sealing wires are pushed against each other over the full length. The wires are mounted using the sealing wire tensioners. These are clamps mounted on a guiding block. A spring is used to keep the tension on the wire. A technical assembly drawing of the top sealing bar is included in the appendix.

The vacuum clamp is included in the design to prevent the tail end of the film from moving while the head end is aligned and cut. The clamp is made of two bars of bright mild steel. A technical drawing of these parts is included in the appendix. The bottom bar has six separated 'chambers' in which a vacuum can be 'stored'. The vacuum is generated by six Festo VN-14-L-T4-PQ2-VA5-RO1 vacuum generators, one for each chamber. This name again has some keywords, of which 14 means nozzle size 1.4mm, L means low vacuum but high suction rate and T4 the shape of the generator. Then two specifiers of the pneumatic connections (VA5 is a male G1/4 thread) and the last states that a silencer is included (the longer tubes pointing backwards). The vacuum generators are screwed directly into the bottom vacuum bar. This saves making extra connecting parts and volume to be vacuumized.

The top bar is screwed onto the bottom bar with an insulating material in between, to prevent the vacuum from dropping. Small holes and a narrow slot on the top side make the vacuum 'connection' with the film on top. The four center chambers are all of the same size and in total 900 mm wide. This is the width of a product that is often processed on machine S1, besides

the 1200mm wide film. Both outside chambers are 150mm wide to provide vacuum clamping to the full width. When the smaller film is processed, these chambers will not be used. The use of more chambers opposite to using one large vacuum chamber is that no vacuum is lost this way by uncovered parts of the clamp. Furthermore, the vacuum generation is better since all chambers have their own generator. Even if one of them would fail, the major part of the film is clamped.

This chapter described three of the subassemblies that show the working principle of the splicing station nicely. The major components and design choices have been explained and the final designs showed in detail. The next chapter discusses some of the smaller projects that were done during the first half of the internship.

Chapter 5

Smaller projects

This chapter describes the design of a tension control system for the side reels of the unwind station for machine C20. Next, the redesigns of the folding station and sealing station for this machine are discussed. Finally, some small side projects are mentioned shortly.

5.1 Tension control for side reels

The previous intern at Safepak, Tom Eller, designed a new unwind station for conversion machine C20. This design is shown in figure 5.1. This machine feeds the film to the conversion machine in which the film gets folded, punched and sealed. The bags in this machine have a handle, formed by the film on the two side reels. It is critical for further processing that these two reels are unwinded on the good location and with the right tension, equal to the film tension of the main reel (2). Tom's design included a tension system for the main reel using a dancer roller (3), but not for the side reels. It was my task to design this control system. The issue with this tension is that the diameter of the reel differs durign operation. Since the force in the film needs to be constant (tension = force/area, area = constant), the torque provided by the motor (4) should be controlled. Two possibilities for this tension control were examined.

5.1.1 Control methods

The first control solution uses the lever arm resting on the side reel (5) which is used to trigger an alarm that the side reel is almost empty. This arm can be used to detect the radius of the reel (and hence the moment arm for the tension in the film). The motor torque can then be adapted with an extra gain given by this measurement. However, a torque measurement on the motor is still required. See figure 5.2.

The second control solution is similar to the one used for the main reel, namely a dancer roller. This is a method already applied on many machines. The film is webbed via a roller on a lever arm, see figure 5.3. The lever arm is supported by a pneumatic cylinder. The motor applies a breaking moment on the film, such that tension in the film exist when machine C20 pulls the film forward. If the machine accelerates, the roller will move upwards because the tension increases. The lever arm is attached to a potentiometer, which signal is used to decrease the torque of the motor, thus leveling the tension again. This process works vice versa when the machine decellerates or stops. The lever arm with the so called 'dancing' roller will oscillate around its neutral point (setpoint). This creates an easy control problem. A PID controller can keep the lever arm in its setpoint in order to keep the tension in the film constant. This second method is finally chosen in consultation with the supervisor, Grant Thorburn.

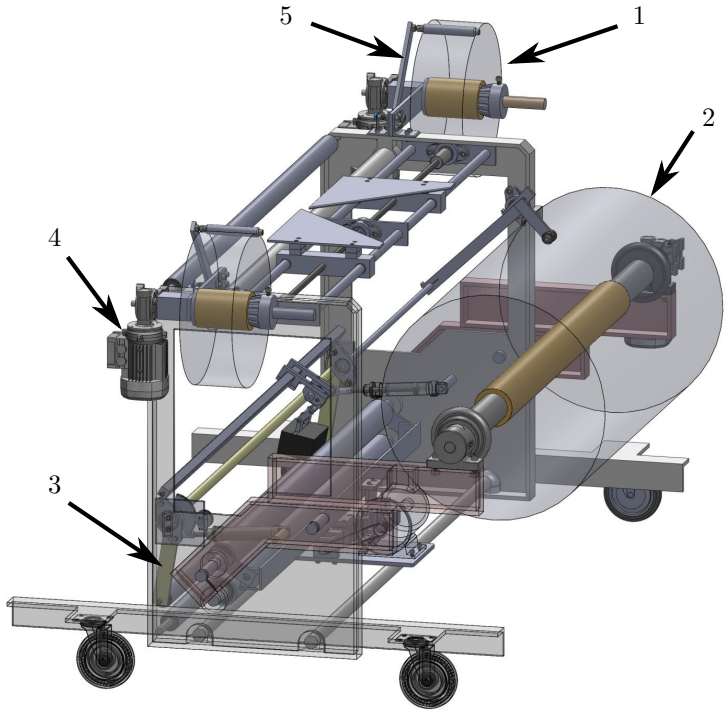

Figure 5.1: C20 unwind station. *figure adapted from: Internship report Tom Eller, page 9*

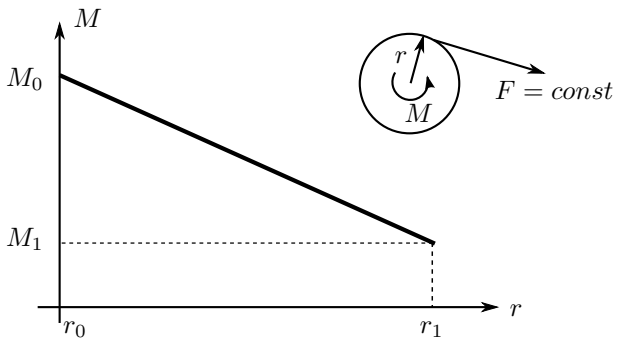

Figure 5.2: Tension control using radius detection with alarm lever arm

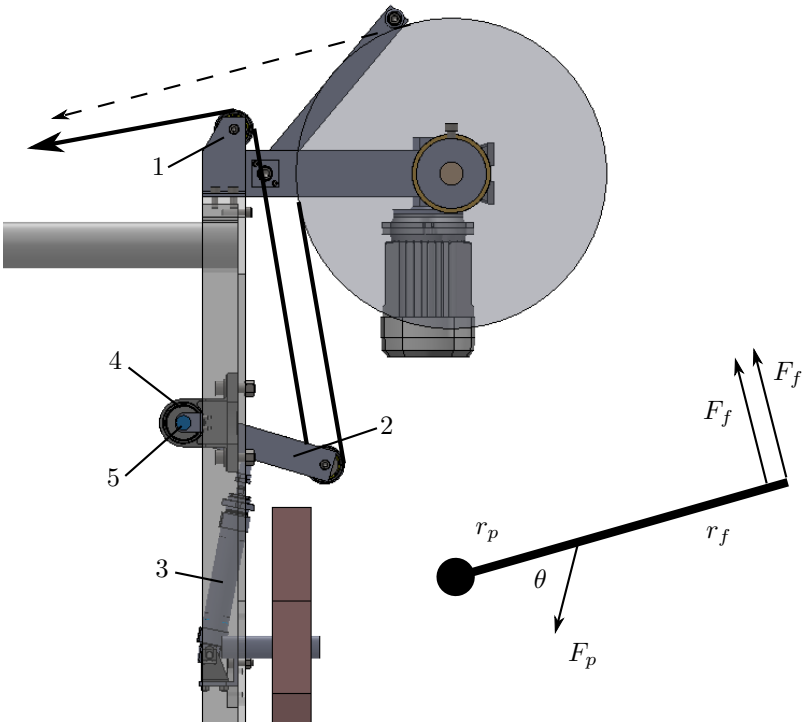

Figure 5.3: Unwinder of C20 with new dancer rollers for side reels. The dashed line shows the old webbing for the film, the solid line the new situation. A Free Body Diagram of the lever arm for piston force calculation is shown in the right bottom corner.

5.1.2 Design of the dancer rollers

Figure 5.3 shows the parts for the tension control system. The fixed roller (1) on top of the sideframe is required for the webbing of the film to the correct location. (2) corresponds with the lever arm and dancing roller. Part (3) is the pneumatic cylinder and (4) is the flange mounted bearing with which the dancing roller is mounted to the sideframe. The bearing is not loaded significantly, and is mainly chosen for its geometry. Part (5) is the potentiometer, used to measure the position of the lever arm. The subassembly is designed to fit with the rest of the machine as designed by Tom Eller.

The required force of the pneumatic cylinder can be calculated with a static analysis of the lever arm. The Free Body Diagram in figure 5.3 shows the forces that exert a moment around the hinge point of the bearing (4). The required force of the piston is highest when the film is perpendicular to the lever arm and the piston under an angle. Assuming a required film tension of 5 MPa (Eller, p.11) and a film of 0.140m wide and $50 * 10^{-6}$m thick, the moment equilibrium about the rotation point of the lever arm yields:

$$F_p = \frac{2 * F_f * r_f}{r_p * \sin\theta} = \frac{2 * T_f * A_f * 0.190}{0.09 * \sin 70^\circ} = \frac{2 * 5 * 10^6 * 50 * 10^{-6} * 0.190}{0.09 * \sin 70^\circ} = 157N.$$

In order to account for uncertainties in fabrication or wider or thicker films, a safety factor of 2.5 will be used. This yields a required piston force of 393N. It is found that the pneumatic cylinder

Figure 5.4: Manufacturing the dancer roller

of supplier Festo DSNU-32 with theoretical force of 406N is suitable for this application. A stroke of 80mm is used, such that the dancer rollers can compensate for $2 * (190/90) * 80 \approx 340$mm film. This is sufficient to stabilize the tension in the film.

At the moment that this report is written, the system is under construction in the workshop (see figure 5.4. Commissioning will hopefully occur soon.

5.2 Folding station C20

During the first two weeks of the internship, the folding station of machine C20 (with the new gusset folding attachment as designed by Tom Eller) was redesigned. The lay-out of the total machine was going to change due to the new unwind station. Therefore, the current folding station would be relocated and hence required some redesign to match with its new location on top of the C20 sealing station. The consequences of repositioning the sealing and folding station were investigated and small redesigns were made, for example the reassembling of the controlbox of the sealing station and a new webbing scheme for the machine. Figure 5.5 shows both the current and redesigned frame. At the end of my internship, welding of the new frame was completed and further assembly was about to occur.

(a) Current machine (b) Redesign including gusset folder

Figure 5.5: Folding station of C20

5.3 Sealing station C20

The sealing station of machine C20, see figure 5.6(a), can be used to seal the side strips of the handle to the main film. Therefore, 4 sealing blocks are used. The two 'outer' sealing blocks can be seen in the figure, the other two ('inner') are located behind the film. Alignment of these sealing blocks is important for the quality of the seal. It is however hard for the operator to align these sealing blocks, since two of them are hard to reach and not visible when the film is webbed through the machine. As a solution for this problem, the alignment frames as shown in figure 5.6(c) are designed, in such a way that it can easily be fixed to the current machine. The frame makes sure that the inner and outer sealing blocks are perfectly aligned. An adjuster, located on the top of the frame, can be used to move both left and right blocks simultaneously. This makes it very easy for the machine operator to align the sealing blocks. Only the center of the gusset needs to be located and after fixing the adjuster at that position, the width of the gusset is easily set. Figure 5.6(b) shows the manufacturing drawing and the produced parts for the adjuster.

(a) Current machine

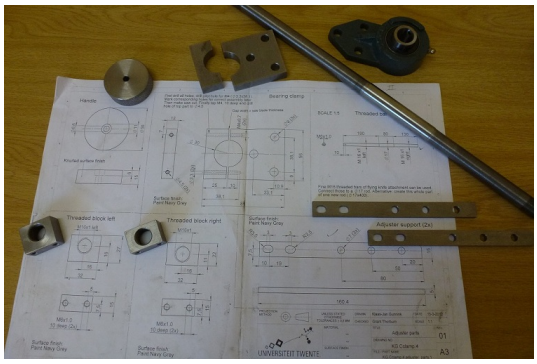

(b) Manufacturing drawing and produced parts for adjuster of C-clamp

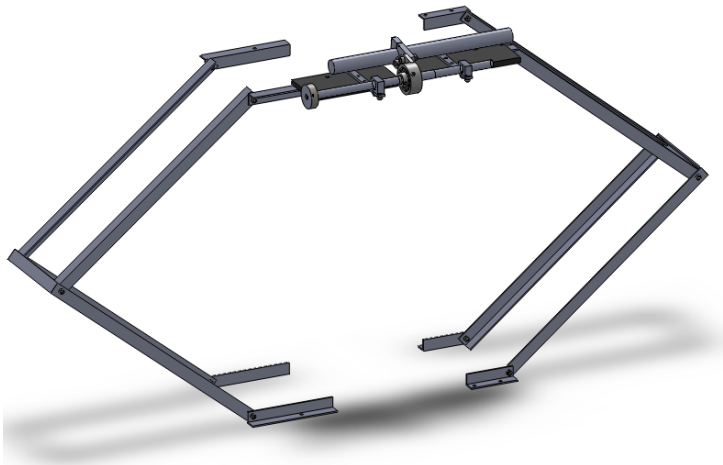

(c) SolidWorks model of designed alignment frames

Figure 5.6: Sealing station of C20

Chapter 6

Conclusions and recommendations

This final chapter gives some conclusions about the projects described in this report and recommendations for future work.

During my internship, various projects were done. The main project considered the design of a new splicing station for the slitting department. This machine will (semi-)automate the currently manually done process of joining two ends of film and trimming the waste ends. Lowering the process time and amount of operator input and making a splice of consistent quality were the goals.

The design incorporates working principles used elsewhere in the factory and new ideas. The flying knife and sealing concepts are used and designed such that the new requirements of the machine are met. This is extended with a moving clamp system and a vacuum clamp. The whole splicing station is designed to fit on machine S1 and therefore, supporting frames including a lift system are designed.

Smaller projects during the first half of the internship aimed at various other machines. The design of a new unwinder for machine C20 required redesign of its folding and sealing stations. For the sealing station, a system to improve the alignment of the sealing heads is designed. For the unwinder itself, a tension control system for the side reels is designed in the form of a dancer roller system. All these improvements for machine C20 raise its reliability and the quality of the products made.

Unfortunately, not all machine parts were produced yet at the end of the internship. Therefore, it was not possible to verify the working principles of the designs or help troubleshooting the issues that will be detected during commissioning. However, all drawings for the machines are available at the workshop. Production and commissioning of the designs should therefore happen as soon as possible.

Besides all these mechanical improvements for the factory, a lot of quality improvement and downtime reduction can be achieved by training machine operators and making them understand the machines they are working with better. This will reduce the amount of waste as well.

Chapter 7

References

The following websites are used between 13-02-2012 and 11-05-2012:

Safepak	www.flexiblepackaging.co.za
Festo (pneumatics)	www.festo.com
Delta (motors, drives)	www.delta.com.tw
SKF (bearings)	www.skf.com
FLT Bearings (bearings)	www.fltbearings.co.uk
Pearl Technologies (packaging equipment)	www.pearltechinc.com
Ga.Vo. Meccanica (core handling equipment)	www.gavomeccanica.com
Raumaster (core handling equipment)	www.raumasterpaper.fi/products/core-handling/

Various other websites for downloading CAD parts were used as well.

Other references:

- Internship report Tom Eller
- Festo product overview catalogue
- BeltTorque catalogue for power transmission belts
- Bearing Man Group catalogue for 'Ball screw & Linear way' linear bearings

Appendix A

Manufacturing and assembly drawings

On the next few pages, three of the many technical drawings that were made are shown. Since the dozens of drawings were mainly made for manufacturing purposes, just a few are shown.

The first is a drawing with assembly and manufacturing information about the belt tensioning system of the flying knife, as described in section 4.1. The second drawing shows the assembly drawing of the sealing top bar as described in section 4.3. The third drawing is a manufacturing drawing of the vacuum bars.

- A1: KG.Splicing.3.3.tensioner_assem
- A2: KG.Splicing.5.sealing_top_assem
- A3: KG.Splicing.4.1.vacuum_clamp

The assessment form as filled in by Grant Thorburn and the report written for the Twente Mobility Fund (International Office UT) about culture and preparations for the internship are attached as well.