Designing a tablet storage case
for elementary schools

Joerie te Grotenhuis
Bachelor assignment 2015

UNIVERSITY OF TWENTE.

hulshof

Title
Designing a tablet storage case

Duration
April – October 2015

Publisher
University of Twente
Industrial design
7500 AE Enschede

Author
Joerie te Grotenhuis
s1372319

Company
Hulshof Business Cases
Lievelderweg 72
7131 MD Lichtenvoorde

UT tutor
J.F.H. Beeloo

Company tutor
E. Hulshof

Examinators
J.F.H. Beeloo
G.M. Bonnema

Pages:	46
Appendices:	28

Preface

This report is a bachelor assignment in the field of Industrial Design. The last couple of months I did an internship at Hulshof. During which I was asked to tackle a problem regarding tablet storage cases.

This assignment could not have been completed with the help of my UT tutor Jeroen Beeloo who gave me feedback and guided me through the process of creating this report. Secondly, I would like to thank Erik Hulshof and Dennis Heesen from Hulshof Business Cases who supported me throughout the design process.

Abstract

This bachelor assignment report describes the design process of a tablet storage case. The company, Hulshof business cases, has manufactured a tablet storage case but it struggles to provide a correct fitting due to the great variety of tablets available. The goal of this assignment was to design a universal case that fits all the devices found in an elementary classroom. After researching the topic it was decided that the case has to store up to 24 tablets or 16 laptops.

The final design comes in three variations. The exterior is always the same but the internal storing system has three variants. The first one can store up to 12 tablets with some extra storage room for peripheral devices .The second one can store up to 24 tablets. The third one can store up to 16 laptops. The case can be transported between classrooms. It can be chained to another object to prevent theft. The case can also charge the devices.

Samenvatting

Deze bachelor eindopdracht beschrijft het ontwikkelingsproces van een tabletkoffer. De opdrachtgever, Hulshof business cases, heeft al een tabletkoffer ontwikkelt alleen het probleem is dat er zoveel tabletformaten zijn dat de passing bijna altijd moet worden aangepast om een correcte oplossing te geven. Het doel van deze bachelor opdracht is om een universele koffer te ontwerpen die alle apparaten op kan slaan, die in een klaslokaal van de basisschool te vinden zijn. Na het vergaren van informatie omtrent tabletgebruik in het klaslokaal is besloten dat de koffer 24 tablets of 16 laptops moet kunnen bevatten.

Het eindontwerp komt in drie variaties. Het omhulsel is altijd hetzelfde maar het binnenwerk heeft drie variaties. De eerste variant kan tot 12 tablets bevatten en heeft nog wat extra opbergruimte. De tweede variant kan tot 24 tablets bevatten. De derde variant kan tot 16 laptops bevatten. De koffer kan worden verplaatst zodat je hem kan verwisselen tussen klaslokalen. Daarnaast kan de koffer ook nog worden vast geketend aan een ander object. Dit is gedaan om diefstal te voorkomen. De koffer kan de apparaten ook opladen.

Table of contents

1. Introduction #
    1.1. Hulshof Business cases 1
    1.2. Motivation 1
    1.3. Objective 1
    1.4. Reading guide 2
2. Analysis
    2.1. The situation 3
        2.1.1. Quick facts 3
        2.1.2. Adoption 3
        2.1.3. Charging 4
        2.1.4. Who decides? 5
        2.1.5. Software and training 5
        2.1.6. Current issues 5
        2.1.7. Side note – Snappet 6
        2.1.8. Collages & scenario 6
        2.1.9. Conclusions 6
    2.2. Classroom of the future 7
        2.2.1. USB type c 7
        2.2.2. Future learning methods 7
        2.2.3. Wireless charging 9
        2.2.4. Conclusions 10
    2.3. Competition 11
        2.3.1. Prices 11
        2.3.2. Competitors 11
        2.3.3. Conclusions 12
    2.4. Device dimensions 13
        2.4.1. Thickness 13
        2.4.2. The market 13
        2.4.3. Dimensions 15
        2.4.4. Port placement 16
        2.4.5. Conclusions 16

#

    2.5. USB hub 17
        2.5.1. USB synchronisation 17
        2.5.2. The Cloud 17
        2.5.3. USB hub overview 17
        2.5.4. Conclusions 17
    2.6. Safety 18
        2.6.1. Heat dissipation 18
        2.6.2. Electrical hazard 18
        2.6.3. Physical safety 18
        2.6.4. Device safety 18
    2.7. Design requirements 19
        2.7.1. Requirements 19
        2.7.2. Desires 19
        2.7.3. Task allocation 20
3. Idea generation
    3.1. Configurations 21
    3.2. Morphologic analysis 22
    3.3. Sketches 22
4. Concepts
    4.1. Rating criteria 29
    4.2. Concept one: double row 30
        4.2.1. Flexibility 30
        4.2.2. Mobility & ergonomics 31
        4.2.3. Feasibility 31
        4.2.4. Maintenance 31

	#
4.3. Concept two: drawer	32
4.3.1. Flexibility	32
4.3.2. Mobility & ergonomics	32
4.3.3. Feasibility	32
4.3.4. Maintenance	33
4.4. Concept three: RESTRICTED	34
4.4.1. Flexibility	34
4.4.2. Mobility & ergonomics	34
4.4.3. Feasibility	35
4.4.4. Maintenance	35
4.5 Rating concepts	36
5. Final design	
5.1. Final decisions	37
5.2. Remaining problems	37
5.2.1. Access for maintenance	37
5.2.2. Braking	38
5.2.3. Adjustment system	39
5.2.4. Cable management	40
5.2.5. Prohibit unauthorized access	41
5.2.6. Prevent lid from slamming	42
5.2.7. Gliding equipment	42
5.2.8. Heat build-up	42
5.3. Materials	42
5.4. Colour studies	43
5.5. Instructions	44
5.5.1. Grabbing/inserting Device	44
5.5.2. Fixing adjustment system	44
5.5.3. Access PSU compartment	44
5.6 Evaluation	45
5.7 Conclusion	46
6. Reflection	
6.1 Human-Product interaction	47
6.2 Design	52
6.3 Conclusion	53
References	54
Appendices	
A – Plan of action	57
B – Collages & scenario	62
C – Overview of competitors	64
D – Tablet thickness	71
E – USB hub overview	72
F – Configurations	76
G – Morphologic analysis	80
H – Remaining idea sketches	81

Introduction

1.1 Hulshof business cases

Hulshof business cases is a family company founded in 1918. In its early years it was a tannery. To this day, “Hulshof Leder en Metaal”, remains engraved on the façade of the building. In the 1950s they started production of their first suitcases. Nowadays, Hulshof provides cases for the mobile workforce. A typical business case stores a notebook with a printer or other office products.[1]

Hulshof is a company that develops and sells business cases. Manufacturing is outsourced for the biggest part. It’s preferably done locally which results in relatively short lead times.

Products can be tailor made but standard cases are also on offer. The product range is divided into three categories. The first category is engineering & inspection services. These products are used by technicians and inspectors. They can store tools or a notebook. The second category is business services. These products are used by business advisors and communication consultants alike. So called “Flexkoffers” can be fitted with a laptop and beamer. The third category is education & training. The products are used by teachers and students and can store multiple laptops or tablets.

If none of the standard cases comply with the clients wishes a tailor made product is offered. Hulshofs’ motto is “kan niet? Mooi wel!”

1.2 Motivation

Hulshof wants to strengthen its market position in storage solutions for education. More specifically, with the adaptation of electronic devices in the classroom there is a growing demand for storing and charging laptops and tablets.

There are currently two models designed and available. Both models store up to ten tablets. Additionally, the sealed electronic compartment houses a power strip with USB adapters plugged in. The first model accommodates room for 10 inch tablets with the charging port on the short (bottom) side such as Ipads. The second model accommodates room for 10 inch tablets with charging ports on the long side which are mostly android tablets.

If customers want to store more or different devices a custom solution has to be developed.

1.3 Objective

The goal is to provide Hulshof with a design to store devices in the classroom. Tablets and laptops need to be charged and stored. The product will be used in primary schools and has to be mobile. This bachelor assignment is done in a time frame of three months.

The complete plan of action (in Dutch) can be found in appendix A

1.4 Reading guide

Throughout this report certain terms and words are brought up frequently. In order to maintain readability some of the following terms are explained.

Unless mentioned otherwise, “devices” refers to tablets, chromebooks and other small laptops. The definition of a tablet is a computer contained in a touchscreen panel. It is operated by fingers or stylus.[2] A Chromebook is a new category of notebook computers and mobile devices that runs Google’s cloud-based Chrome OS operating system.[3] The first models were around 12 inch. There are models up to 15.6 inch, as of early 2015. Laptops with similar dimensions are also referred to as “devices”.

“Case” in the context of this paper implies a product that stores *multiple* devices. Not to be confuse with cover.

“Cover” in the context of this paper implies an additional casing which protects *one* tablet from damage. They generally make the device bulkier.

Analysis

In this chapter information is gathered on the subject of tablets in education. How are they used now? What will the future bring? What does the competition offer?

2.1 The situation

It's crucial to define what classrooms look like nowadays. In this section current developments are highlighted.

2.1.1 QUICK FACTS

According to a Kennisnet study 35% of Dutch teachers (primary and secondary) have a classroom where every student has their own device (August 2014). Another 8% said they are planning on doing so next year. Adoption is higher in secondary school but they mostly use the Bring Your Own Device (BYOD) approach. This means device storage is not a major concern for these schools. Primary schools tend to take more responsibility for the devices themselves. Only 15% let their students take their devices home with them[4].

Kennisnet is an independent organization which advises Dutch educational institutions on effective use of ICT.

2.1.2 ADOPTION

Two research studies[5][6] are cited which explain the use of tablets. Both papers include qualitative research about tablet implementation. Although the amount of schools that were interviewed is relatively small it does provide a valuable insight on use and implementation. The first study has a sample size of five schools. The second study has a sample size of ten schools.

Following is a list of citations which sketches the situation and use in the classroom.

There are primary schools in the Netherlands that order a small amount of tablets when introducing the new system. Enough for one classroom. Sometimes they have to share them among the students in groups of 2 or more. In other situations an entire classroom gets enough tablets for everybody. These tablets can be used only by that one grade or used by another grade on a different day of the week.

"Een school heeft een zeer beperkt aantal tablets (elf) in huis om daar met verschillende leerlingen mee te werken: leerkrachten hebben ieder een vaste dag dat ze de iPads kunnen gebruiken."(Meijer et al, 2014) [5]

Introducing tablets can also benefit the existing ICT infrastructure. An interactive whiteboard (IWB) can broadcast live from the teachers tablet allowing everybody to see the teachers screen. IWBs are already present in a lot of classrooms in the Netherlands. For some schools this benefit is a driver to purchase tablets.

"Scholen hebben voor tablets gekozen omdat ze al andere devices hadden, zoals digitale schoolborden, desktops en laptops. Tablets zijn handzaam en net als laptops flexibeler in het gebruik (niet plaatsgebonden)." [5]

In terms of actual use, tablets can be operated individually or in pairs. Personalized tablets have the benefit of adjusting to previous inputs by the student. That way the software can offer enrichment material for students who excel at the normal curriculum. The benefit of a tablet per two or more students is that it promotes teamwork.

"Op de helft van de scholen zijn er onvoldoende tablets om alle leerlingen te bedienen. Op die scholen delen de leerlingen de tablets. ." [5]

The frequency of use also varies a lot from school to school. For frequent users easy and simple charging is an important aspect.

"Vijf leerkrachten gebruiken de tablets dagelijks, op één school worden ze een keer in de week ingezet en op de school die net is begonnen, zijn ze nog niet in lessen gebruikt."[5]

2.1.3 CHARGING

Charging the tablets is an important feature of the tablet storage solution. Most tablet manufacturers use micro USB connectors. iPads and other Apple devices are charged with a different connector. Also, some custom made education tablets (e.g. Snappet tablets, see 2.1.7.) have their own connector type.

To complicate things even further some schools both use iPads and android tablets. Having more than one cable connector type is an option but cable management will be even harder than it already is. In the near future it is a possibility that USB type C will be the next standard. Even Apple made an USB type C laptop replacing the apple connector. Standardisation could mean a universal charging solution. This, however, is currently not the situation.

"Sommige scholen gebruiken iPads, andere Android (Samsung, Javics). Op vier scholen worden iPads gebruikt, op drie scholen Androids en op één school worden beide ingezet."[5]

Synchronizing can be done two ways. Firstly, the power cables can also send and receive data. A master tablet synchronizes every connected tablet. Alternatively, the cloud can provide every selected software application over the air. This requires a Wi-Fi connection.

2.1.4 WHO DECIDES?

In most instances the board of directors makes the first step at implementing tablets. But before the final decision is made almost all schools discuss it with the teacher who will be using them. They often aid in the decision making process.

"Bij de leerkrachten zelf is tevens naar draagvlak gevraagd. Zes leerkrachten melden dat er sprake is van een stevig draagvlak voor de invoering van tablets. Zij waren ook betrokken bij de invoering."[5]

Primary school 'de Kolkribbe' started an experiment with netbooks. In this case the board of directors initiated the project:

"Het project is geïntroduceerd op directieniveau, in samenwerking met de projectleider ICT (bovenschools). Daarnaast is er veel wisselwerking met de betrokken leerkracht. Het team is op de hoogte gesteld van de vernieuwing en men staat er positief tegenover." (Heemskerk et al, 2011) [6]

2.1.5 SOFTWARE AND TRAINING

It would make sense that the software management is done centrally by a master tablet or computer. Updates for applications are important and it would make sense to configure this centrally as well.

Before implementation teacher often receive training. This could also include hardware aspects such as charging and storing the tablets properly.

"Bij de andere helft van de scholen is scholing op ICT-en-onderwijs gebied nog gaande, vaak ondersteund door het bedrijf dat het netwerk beheert. Soms nemen leerkrachten de tablets mee naar huis voor zelfstudie. " [5]

After receiving training teachers generally resolve problems by asking each other.

2.1.6 CURRENT ISSUES

A stable internet connection can be a problem since a classroom of tablets increases load on an internet network significantly. This is mostly resolved after the first few weeks.

"Directeuren noemen opvallend vaak technische zaken als belemmerende factoren bij de realisatie van onderwijs met behulp van tablets (vijf keer), terwijl slechts twee leerkrachten deze noemen. Hierbij gaat het bijvoorbeeld om het synchroniseren van de tablets." [5]

Poor functioning tablet software demand attention from the teacher. During this time the students do not receive education.

"De leerkrachten zijn minder enthousiast geworden over de innovatie.'Te vaak moest ik kinderen te hulp komen omdat de software niet goed werkte, ik kreeg steeds minder tijd om kinderen te helpen bij hun leesproblemen'."[6]

E-readers and tablets are similar in use and requirements. In the following situation a school experienced difficulties with transport and start up. It was time consuming. Their problem was as follows:

"Qua klassenmanagement blijkt het lastig om tijd te reserveren voor het opstarten en opruimen van de E-readers. Deze moeten vanaf de oplaadkast naar het lokaal worden gebracht en weer terug. Dit zal verbeteren als ook voor de andere vakken met de E-readers wordt gewerkt, dan kost het relatief wat minder tijd"[6]

2.1.7 SIDENOTE – SNAPPET

Snappet is one of the biggest educational tablet providers in the Netherlands. Snappet also has clients in Spain, Italy, France and Germany. Around 1000 elementary schools work with the program provided by Snappet. Snappet delivers hardware and software. If a school decides to order a tuition program they will receive; preconfigured tablets with protective casing, a router, a central charger for multiple devices and a plastic storage box.

Snappet has a substantial market share in tablet tuition but it has not found the optimal solution for charging and storage. Figure 1 indicates that storing and charging is rather inconvenient. Particularly, cable management seems to be an unresolved problem.

Snappet allows students to take their tablets home with them to do their homework. Therefore, it is questionable if there is a need for a tablet storage solution specifically for Snappet users.

Fig 1 Snappets 'messy' storage & charging solution[7]

2.1.8 COLLAGES & SCENARIOS

To get an idea of what a contemporary classroom looks like two collages have been made. These can be found in appendix B. The first collage depicts products that can be found in the classroom. The second depicts classrooms using tablets.

To further familiarize with the user a short scenario was written. It depicts a young boy and his day at school. The school uses tablets to teach certain topics. The scenario can also be found in appendix B.

2.1.9 CONCLUSION

Tablets are becoming a common sight in the classroom. There are some downsides but overall tablets are here to stay. Primary school tend to keep the tablets at school. Charging and storing such an amount of devices mostly is not covered by the tablet manufacturer. There are some solutions. Tablet storage cases are the solution to storing large amounts of devices. There are a few companies who offer them. In the competitors analysis this is discussed more extensively.

2.2 Classroom of the future

A device can be outdated fairly quickly. With current developments a device is outdated within a few years. This is not likely to change in the years to come. How will these devices influence future teaching methods? What are the important aspects that need to be incorporated to ensure that the case can last several generations of devices?

2.2.1 USB TYPE C

Before the arrival of the smartphone most brands had proprietary chargers. In an initiative to reduce e-waste[8] most manufacturers agreed to only use micro-USB chargers. Only Apple uses a different cable; the Lightning cable.

With the introduction of USB type C Apple recently incorporated it into its new Macbook. The new technology can deliver a lot more power through the cable as well as data simultaneously. Despite this, laptops still need a power brick to convert AC to DC. Type C cables have thin small connectors which are approximately the same size of current micro-USB connectors. A type C cable does have a different connector shape. Therefore, it is not backwards compatible.

Until recent Apple was the only major manufacturer with proprietary power cables. USB type C is starting to slowly show up in new tech devices. It is very likely that this will replace micro-USB within the next years. Moreover, it's likely it will also be found in simple laptops such as Chromebooks.

When will USB type C become mainstream in devices? For how long will it be incorporated? This is hard to say. Micro-USB, announced in January 2007 took almost four years to become the most widely used in December 2010[9]. It currently still is the most widely used and will remain to be so in the near future. Assuming type Cs lifespan is similar to micro-USB it will be the standard for 5+ years.

This exposes an important aspect. Making a futureproof design is a key element for a successful design. Futureproofing would mean that the power supply unit (PSU) should be replaceable without having to replace the case entirely. This ensures future devices can be charged.

Fig 2 A USB type C connector on the left and a micro-USB connector on the right[10]

2.2.2 FUTURE LEARNING METHODS

Using tablets in the classroom changes the traditional approach. It has both advantages and disadvantages. Commonly established advantages are *(Henderson, S. & Yeow, J. 2012)*[11] :

- Connectivity – The ability to access internet. Students can quickly access almost unlimited amounts of information.
- Mobility – The compact form factor enables students to share information between groups and encourages them to interact.
- Engagement – Certain learning apps give real time feedback. This allows students to correct during instead of after completing an assignment.

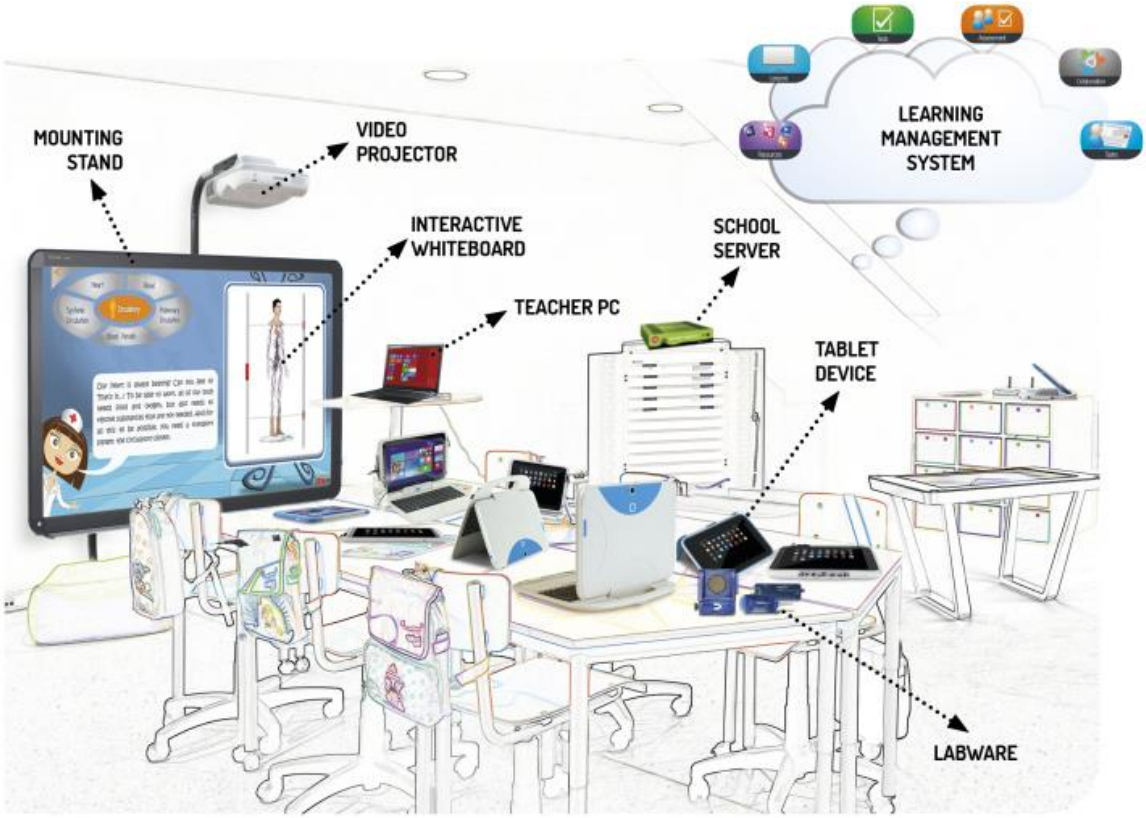

Fig 3 Innovative looking classroom. [12] Interestingly enough, all this technology is already available.

The study also remarks on the disadvantages. The most common ones are:

- Distraction – Although this can be mitigated by restricting certain user actions, some students can get distracted by the tablets and not pay attention.
- Implementation – Current classrooms often don't have a Wi-Fi network with sufficient capacity to provide fast internet to every device. Future classrooms won't suffer from this issue as much.
- Not standalone – Many teacher remark that an iPad is a great addition to the classroom. They add that it is far from completely replacing the traditional classroom.

More and more schools think the advantages outweigh the disadvantages. Schools are free to choose how they implement devices into their educational program. Some teachers create their own content in simple Word or PowerPoint files. There are also modules made by educational organizations. Often they offer educational apps.

Regardless of what the school chooses almost all programs rely heavily on the internet. Adequate internet routers or similar devices are a must have for future classrooms.

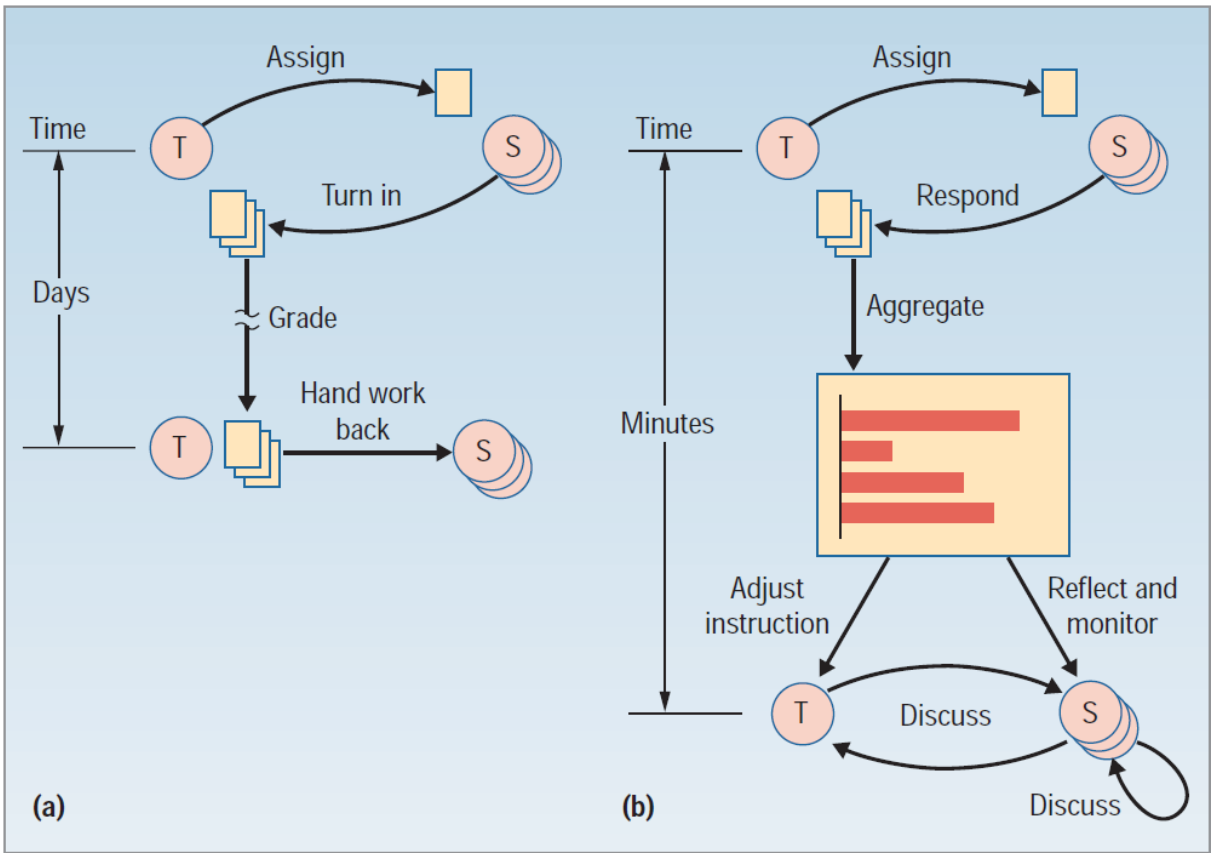

Fig 4 (a) traditional teacher-student interaction. (b) tablet based teacher-student interaction[13]

2.2.3 WIRELESS CHARGING

Data is commonly transmitted wirelessly. If devices could also be charged wirelessly there would be no need for any ports. Wireless charging could be integrated into the case but also the desk.

There is range of technologies that enable devices to charge wirelessly. These can be categorized into three groups.[14]

The first one is short range. Both inductive and conductive charging are wireless. Inductive is commercially widely available. A lot of tech manufacturers are ensuring their devices are compatible with the technology. One single pad can accommodate multiple devices. There are two major downsides. Firstly, they generally are only powerful enough to charge smartphones and small tablets (up to 7 inch). Secondly, there are currently no variants available that can hold enough devices for an entire case.

As of 2015, high-end smartphones and small tablets are Qi enabled[15]. This is a new standard which enables inductive charging. The technology is promising but not yet ready to charge tablets for an entire classroom.

Conductive is also short range. It requires metal-to-metal contact and is not favoured by tech manufacturers.

Midrange wireless charging is currently not available but the first models should be available in 2016.[14] This technology relies on resonant inductive coupling. The range is a few times larger than the coil diameter[15]. Its efficiency is somewhat lower than the short range variants. One advantage it does have over short range charging is that alignment isn't much of an issue. Short range chargers don't charge unless correctly aligned.

Long range charging currently is far from being a viable alternative. It’s currently in development using a variety of different technologies, including radio frequencies, infrared light, ultrasound etc. Market readiness is not be expected within the foreseeable future.

2.2.4 CONCLUSION

There are a lot of promising technologies that lie ahead. This emphasizes the fact that the case has to be prepared for the next couple of years. While some technologies might not be included in the case now it might change over time. The case needs to be readjustable so it can outlive a couple generations. This is a vital aspect of the design.

Fitting the case with USB type C cables can be achieved relatively easy. It would need new adapters or a new USB hub. The rest can stay the same.

On the other hand, wireless charging is a feature that would be hard to implement in an existing design. It is not expected that wireless charging for large amounts of tablets will be a viable feature for the short term. For that reason wireless charging does not have to be taken in to account.

2.3 Competition

There are several competitors who offer similar products. What features do they offer and at what price? A complete set of tables with information can be found in appendix C. In this paragraph prices and capabilities of the competitors are examined.

2.3.1 PRICES
When deciding on what to buy price can be a decisive factor. Prices (VAT included) start at around €1000 and go up to as high as €4000. Prices predominantly depend on amount of devices stored. The cheaper models store less and have fewer features. All cases mentioned have a charge feature.

Fig 5a A small PRMTEC S7 case[17]

2.3.2 COMPETITORS
These brands are competitors who offer similar products:

- PRMTEC
- Parat
- LEBA Innovation
- LapCabby
- LocknCharge
- Multipad
- Trifibre

PRMTEC offers custom made interiors which is one of its strong features. Standard prices are already relatively high but adding a sync feature to the USB hub almost doubles the price. The fact that there is little information about these cases to find on the internet combined with high pricing makes PRMTEC a weak competitor. PRMTEC really only becomes a competitor if customers want a custom case and money is not an issue.

Fig 5b A large LapCabby trolley[18]

Parat has well-built cases on offer. Besides that, they add value by adding plenty compartments/room for peripherals such as access points, extra cables, and a laptop. Parat cases have four wheels yet have a small enough form factor that they can be carried up and down stairs. High mobility is what makes Parat a strong competitor. Prices are a bit above average.

LEBA cases are purely functional. Both exterior and interior are devoid of any unnecessary style elements. Consequently, they appear to be rugged which might appeal to some customers. Leba offers some unique features which add extra functionality. A LCD display which offers status feedback is one such optional feature. Another one is an extra security measures which consists of a sound alarm going off when a tablet is unplugged without authorization. It appears that Leba does not offer custom made cases. However, they offer 18 different cases that store up to 30 mini tablets or 16 regular (10 inch) tablets. Leba is an all-round strong competitor with below average prices for their base models. Optional features are not cheap.

LapCabby is the only one who is clearly marketed for primary schools. Models start at 12 but can store up to 32 tablets. Their product range is quite extensive and also includes laptop storage. The design language is a strong point and makes LabCabby a strong competitor.

LocknCharge has a travel case which is dust and waterproof. As a result of this the PSU has to be removed from the case when charging to prevent overheating. Pricing is average. LocknCharge offers a products that is not directly meant for classrooms. Instead it is marketed at extreme conditions. Therefore, LocknCharge is not a direct competitor.

Multipad is an interesting competitor because it uses similar design choices as Hulshof. In terms of charging solutions Multipad is more advanced. Prices are above average.

Trifibre cases consist of an exterior by Leba and a custom foam interior. The two tone interior makes it more appealing to some customers but otherwise doesn't make them stand out. It is not specifically targeted at primary schools. In that respect LapCabby has a better design.

2.3.3 CONCLUSION

Parat and Labcabby seem to be the strongest competitors at this moment. Both have a different approach.

Parat cases can be found at a couple schools in the Netherlands. Parat is one of the few competitors who has their cases readily available in the Netherlands. This might be the cause of their presence in Dutch elementary schools.

Lapcabby is the only competitor who clearly distinguishes from the rest in terms of design language. Their presence on the Dutch market may be low but their concept has a lot going for it.

2.4 Device dimensions

Mobile devices are a continually changing technology. What are the specifications of current devices? And what about future trends? This paragraph take a closer look at device dimensions specifically. Establishing what the dimensions are is crucial for designing a case which secures the devices properly

2.4.1 THICKNESS

As technology progresses devices get more powerful. Moore's law[19] states that every two years the number of transistors in an integrated circuit double. This self-fulfilling prophecy started in 1960s and still is true today. As a result, mobile devices get thinner and thinner every year.

In fig. 6 the average tablet thickness is plotted. For a complete set of data points see appendix D. The tablet market started to flourish and expand in 2010 with Apples iPad launch. Averages prior to 2010 are less reliable considering there were very few tablets on the market. Nevertheless, tablets are getting thinner. The thinnest tablet released in 2014, the iPad Air 2, is 6.1 millimetres thin. It is rumoured Samsung is currently working on a 5.5 millimetre thick tablet. This is not yet confirmed by Samsung but it indicates what could be expected in the near future.

There is no Moore's law for batteries. This, combined with the fact that tablets need some structural strength means that the decrease in thickness will eventually level off. There are developments in flexible paper-thin screens but they are not commercially available yet.

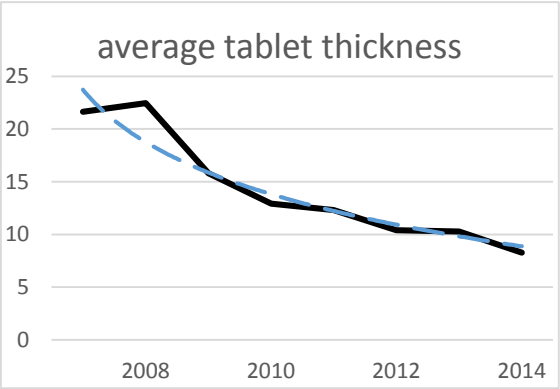

Fig 6 Average tablet thickness 2007-2014 with trend line (in millimetres)

2.4.2 THE MARKET

As mentioned previously, tablets exploded onto the market in 2010. Expected sales figures were very optimistic. In the last two years these figures have been toned down. With the rise of the phablet[21] the market share of the tablets is cannibalised, see fig 8. Added functionalities in phablets made tablets less appealing. Still, tablet sales are increasing globally, see fig. 7. Besides that, phablets can not get much larger considering it has to be carried in your pocket

Teachers often note that a larger screen (>8inch) is preferred for its superiour textinput capabilities[5].

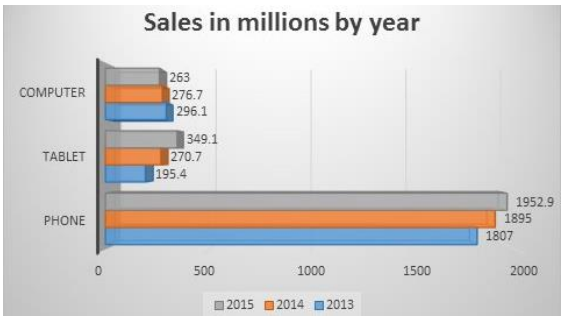

Fig 7 Market share of tablets in recent years[22]

Aside from global figures, IDC reports[23] that the comercial market is gaining momentum. In 2013 the distruibution between commerical and consumer was 11% and 89% respectively. IDC forecasts that by 2018 the commercial market wil grow to 18%. The commercial market largely consists of the education sector.

Sales figures of chromebooks are currently not comparable with tablets at 5.7 million globally in 2014. According to Gartner[24] a 27% increase is expected in 2015. Chromebooks were first introduced mid-2011. Their sales increase has been slow but steady compared to tablets. Chromebooks are not directly marketed at the consumer market which might explain their lower sales figures. In 2014 72% of chromebooks in the EMEA were sold to the education sector.

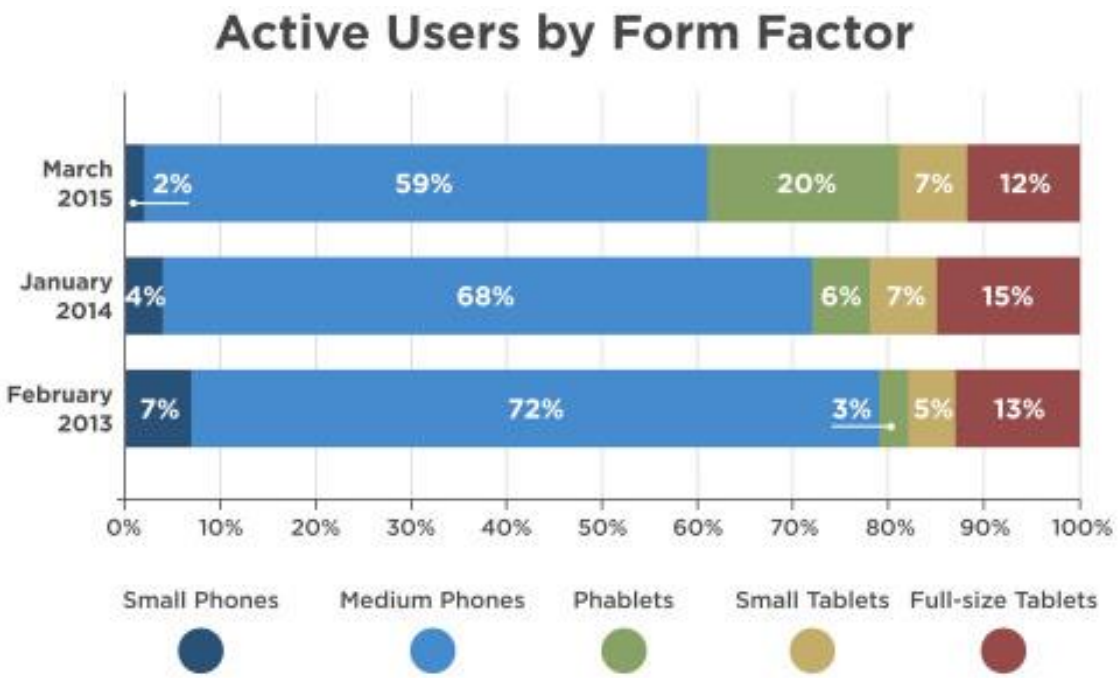

Fig 8 Total figures globally[25]

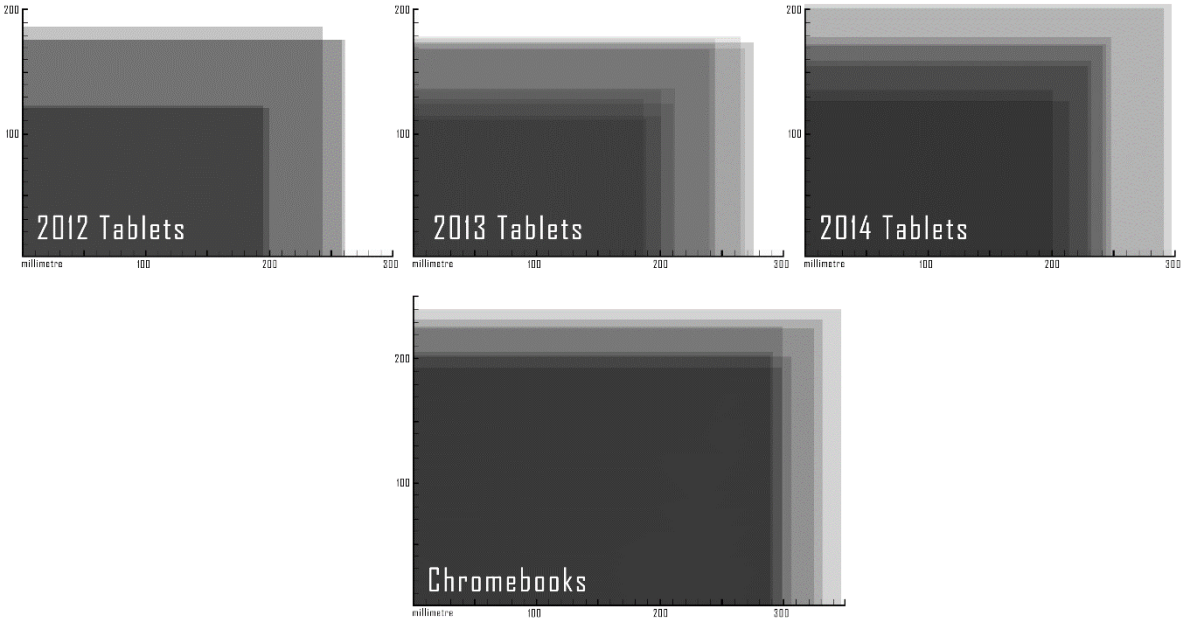

Fig 9 Tablet dimensions in recent years and chromebook dimensions

2.4.3 DIMENSIONS

As of 2010 most tablets were either 7, 8 or 10 inch. In recent years these standards have been blurred due to market saturation. Tech companies try to diversify screen size to remain competitive although 7 and 10 inch remain to be most common. At the extreme end are some tablets of 12 inch or bigger. As of now these sizes remain uncommon. On top of that it is unwieldy for students as they have small hands. Another recent development is the introduction of the laplet or hybrid[26]. These are 10 inch or larger tablets and come with a detachable keyboard.

Outer dimensions are defined by the screen size plus the bezels. Bezels serve the purpose of enabling users to have something to grab onto. Mobile devices are getting smaller and smaller bezels. It has come to a point were Apple needed to implement a palm rejection feature on its iPad minis. When a user accidentally grips onto the border of the touchscreen it knows not to respond to that input.

In fig 9. a set of tablet sizes are layered to illustrate what sizes are available. It is worth mentioning that the large Microsoft surface hybrids are the cause of the two spikes in size for 2014 tablets. They blur the line between tablet and laptop

Power consumption is strongly linked to screen size. Laptops have proprietary chargers instead of USB chargers to provide that required power. USB simply cannot provide enough power. Because of this a line can be drawn. Above a screen size of 10 inch more and more device are no longer powered by USB. This has implications for the case.

Chromebooks come with a power brick whereas tablets have a much smaller USB adapter. A Chromebook, aside from being bigger in general, also needs more space for housing its power supply.

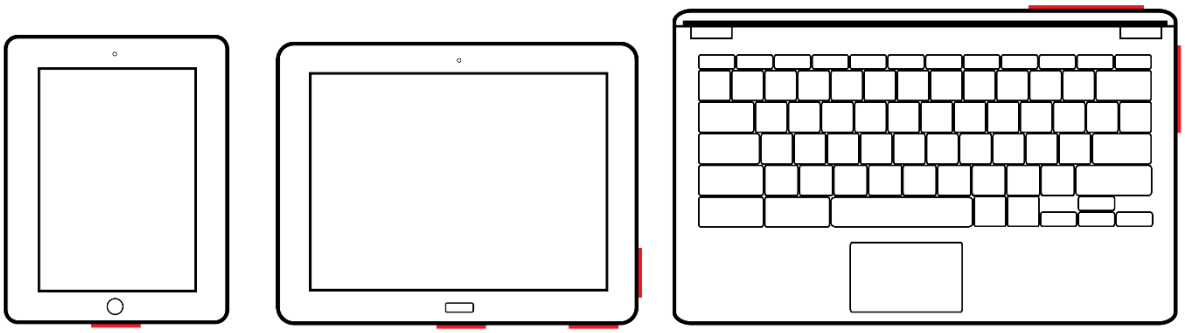

Fig 10 Common port placement (red) for portrait tablets, landscape tablets, and a chromebooks/hybrids

2.4.4 PORT PLACEMENT

Port placement on the devices is influential for the case. The case has to facilitate adequate room for the users to plug in the power cord.

As the size of a tablet increases the layout changes, see fig 10. Smaller tablets tend to have a smartphone like configuration with the home button on the short side (portrait). The charging port often is located on the short side as well. At around 10 inch the majority of tablets have a landscape configuration. The charging port is located on the long side or near the edges. An exception to this rule is the 10 inch iPad. This device is a portrait model. Chromebooks have charging ports at the far side or at the back of the keyboard. Hybrids have their charging ports on the screen part of the device. Usually near the edge of the short side. The long side is covered by the detachable keyboard.

Due to the devices (almost) double symmetry you could argue the range that has to be exposed for charging is from the centre of the short side along the edge to the centre of the long side. When this is accessible for all sizes most devices can be charged.

2.4.5 CONCLUSION

The technology is rapidly changing and new trends can emerge in a very short time. Tablets were a game changer in the early 2010s but were surpassed by the phablet recently. This is the case for the global market. The educational market has seen a steady increase. Both tablets and chromebooks are increasingly adopted by the education sector.

Charging ports can be found at all places on the device but usually near the home button. Due to the symmetrical properties of the devices access to the charge port has to be available at the short and long side.

2.5 USB hub

Devices in education need to deliver the right content at the right time. Every device needs to be up to date so students and teachers can work effectively. Additionally, the devices need to be charged and ready for use. How can content be managed? What about charging?

2.5.1 USB SYNCHRONISATION

Aside from charging the device USB cables can also send and receive data. With current cables it is not possible to charge and synchronise at the same time. Plugging it into the master port enables data transfer. This master port sends all data to all other USB ports. Data transfer time depends on the type of cables used and file size. This technology has been around since the beginning of mobile devices. On most platforms software is available to organise synchronisation for multiple devices.

The cost of a charging hub with synchronise ability is considerably higher than a regular charging hub. Cambrionix for example charges €200 extra for the same model with this ability.

2.5.2 THE CLOUD

Increasingly popular is sharing via the cloud. Most devices are meant to be used with internet so exchanging files wirelessly becomes an option. Although it puts extra stress on the network it is very convenient. Once set up properly, it doesn't require user input.

2.5.3 USB HUB OVERVIEW

The complete overview can be found in appendix E.

Tablets have bigger batteries than smartphones. To maintain acceptable charging times tablet chargers deliver charge at a higher rate (a higher current)[27]. Usually 5V 2A adaptors are used for charging tablets.

With that said, some USB hubs in the overview can be discarded as they provide too little power (<10W). Cambrionix hubs are most used by competitors and quality wise capable of handling large amount of power hungry USB devices. This comes at a price. Being the most expensive of them all alternatives should be explored. Dipo and Tripp-lite offer cheaper alternatives. These are Chinese manufacturers and might not have the required quality.

2.5.4 CONCLUSION

Most devices nowadays come with the wireless sharing ability. As a result, synchronising via USB becomes outdated and obsolete. The advantage of USB is that it is not dependent on the internet. Having a redundancy (Wi-Fi and USB) in synchronising options might add extra value.

There are two options for a USB hub. The first one is from a tried and tested British manufacturer. With prices of upward of €500 for 15/16 ports it is an expensive option. On the other hand, there are Chinese manufacturers who also offer USB hub. The quality of these hubs is hard to determine. Prices are about half as much as Cambrionix

2.6 Safety

There are several aspect of safety that come in to play. A USB hub generates heat when charging which forms a fire hazard. Exposed electrical components form another hazard. Besides that, the case will likely feature moving parts. It is important no fingers or hands can get stuck between them.

2.6.1 HEAT DISSIPATION

Most competitors offer a solution to dissipate the heat generated when charging. When charging large amounts of devices in an enclosed case heat will built up. To combat this there are three solutions.

The first solution is a switch which detects if the lid is open or closed. When the lid is closed it shuts of the power to the PSU or USB hub. This means charging can only be done when the lid is open. When the lid is open heat can escape. The disadvantage is that the devices are not secure when charging.

The second solution is passive cooling. To achieve this, holes are made into the case near the PSU or USB hub. When charging large amounts of devices it is unsure if this measure is enough to prevent overheating.

An addition to that is the third solution. Active cooling adds a fan which blows out hot air. Dissipation of the heat will occur more rapidly.

2.6.2. ELECTRICAL HAZARD

The electrical components can always pose a hazard and should be blocked off where possible. Only for repairs or replacement access is required.

Only the necessary components such as cables and buttons are accessible for the students.

2.6.3 PHYSICAL SAFETY

Moving components can pose a threat when fingers or hands get stuck between them. Aside from immediate danger the case should also be ergonomic. Transporting or using the case will be done frequently and the case should be used while ensuring the user maintains a healthy posture.

2.6.4 DEVICE SAFETY

A key selling point for the case is that is secures schools from financial damage. For example when a schools has 24 students in a class and everyone has a device costing €250 means every classrooms has an investment of €6000. To prevent a case from theft it has to have two important safety steps. The first one is a physical barrier in which prevents thieves from accessing the devices. Secondly, the case itself has to be secured from theft.

2.7 Design requirements

Based on the analysis from the previous paragraphs the following list of requirements and desires is composed. Requirements have to be met. Desires are beneficial but not a requirement.

2.7.1 REQUIREMENTS

- The case has to store devices such as: tablets (with or without protective cover), chromebooks or netbooks
- Case has to provide sufficient power to all devices simultaneously
- Devices have to be protected from damages when loading in or out the devices and during transport
- Target group has to be able to transport/move the case
- Solution has to provide storage for an entire classroom (24 students) assuming every student has his own device
- Stored devices have to be (easily) accessible for target group. Height, clearances etc.
- Electrical components have to be inaccessible for students
- Case has to be able to be locked to prevent unauthorized access and theft
- Case has to be able to be fixed in a room/spot to prevent theft
- Case has to comply with government regulations regarding safety and ergonomics
- Case has to outlast at least two generations of tablets. Case is compatible for the next generation with minor adjustments
- Design has to be “playful” and in line with the target group’s environment
- Cables should not protrude outside case to prevent cutting cables when shutting the lid

2.7.2 DESIRES

- Case has to cut of electricity when all tablets are charged up
- Case has to give feedback to user. Charging/fully charged/syncing status indicator
- Case has to be transported up or down a flight of stairs without the risk of acute or chronic injuries
- Case has to have a synchronisation feature for the devices

2.7.3 TASK ALLOCATION

Global allocation of most important tasks for every user. Each user has their own set of desires for the case.

Student (Main target group)

Task	Their desire
Retrieve/insert devices from case	Easily accessible devices with enough exposed surface area to grip device from and into case
Plug/unplug power cable into/from tablet	Easily locate power port and plug in/out power cable
(optional) Transport case	Transport mechanism that fits their height and capabilities

Teacher

Task	Their desire
Check if all tablets are back in the case	All device are visible at a glance when stored
Check if all tablets are ready for use	Feedback from case/devices on current status
Transport case	Transport mechanism that fits their height and capabilities

ICT Employee*

Task	Their desire
Replace broken cables	Accessible panel to replace cables
Synchronise/update software	Quickly synchronise/update software with least amount of effort
Transport case	Transport mechanism that fits their height and capabilities

*Primary school with an ICT department will have dedicated employees for the technical tasks. It is also possible an outside ICT company is hired. The latter situation means teacher may be responsible for tasks that require minimal technical knowledge such as replacing a defective adapter or broken cable.

Idea generation

In this chapter different approaches are used to generate a variety of solutions. Using mock-ups, paper sketching and digital visualisations a better understanding is created that help to create these ideas. The most promising ideas will be the basis for more detailed concepts which can be found in the next chapter.

3.1 CONFIGURATIONS

After analysing every device I still did not have a clear indication of the physical size of the devices. All information thus far was mostly technical. Fortunately, Hulshof provided several physical mock-ups that enabled a more practical approach. For chromebook mock-ups paper cut-outs were used to give a sense of scale. Puzzling with these mock-ups resulted in a set of configurations. Each configuration had a different approach. Some were focused on being as compact as possible while others were more spacious to allow the devices to be accessed more easily. The best configurations were digitalized. See Appendix F for these configurations. The intend behind each configuration is explained in the next paragraph.

Fig 10 Using mock-ups to try out configurations

Configuration 1 is made to be as compact as possible. It is not 100% efficient but that is because it needs to be flexible enough to store a range of devices from small tablets to chromebooks. Certain devices have their power cable wired outside of the main body. This is done to be as compact as possible. The electrical components needed to charge the devices are behind the row of devices. One major drawback of this design is quite evident. The protruding power cables can get snagged very easily when transporting potentially damaging the cables and devices.

Configuration 2 is focused on minimal cable length. All devices are face with their USB ports towards a centrally placed PSU. This allows for shorter cables to be used which in turn minimizes the chance of them becoming entangled.

Configuration 3 is aimed at having equal height, width and depth. Take, for example, a guitar case. It is very long compared to its width and depth. This can make it unwieldy in certain situations. For that reason a configuration was made that aimed being equal in lengt, width and depth.

Configuration 4 is aimed at a cabinet-like case with drawers. The devices are laying on their backs instead of in an upright position. The USB ports face the opening of the drawer.

3.2 MORPHOLOGIC ANALYSIS

A basic textual morphologic table was made to kick start the first ideas. It does not contain every idea that was created. It helped create early sketches. The table can be found in appendix G.

3.3 SKETCHES

The following sketches are the first visualized ideas. Each illustration is explained briefly.

Figure 11 shows different ways to enclose the devices into the case. Compartments ensure each device have little moving space compared to ribs. A rib layout may cause a user to misalign the device when lowering it into place. On the other hand, a rib layout allow users to pull out a device more easily because it has empty space between each device.

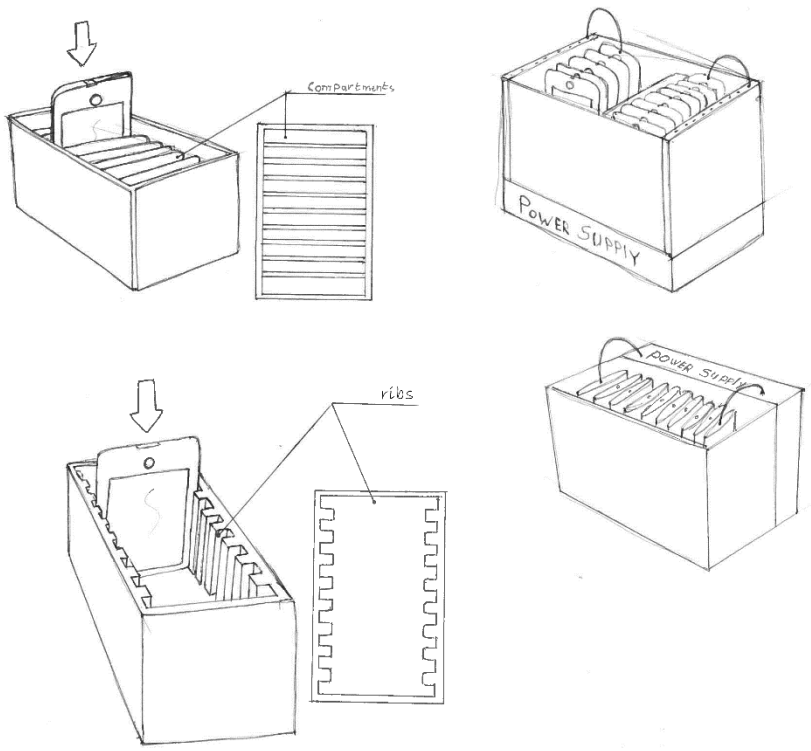

Fig 11 Compartments vs ribs & PSU placement

Figure 12 is a visualisation of configuration 1 from paragraph 3.1. In order to reduce width less room was cleared for cables. Instead cables are wired outside which help retain the compactness. The PSU is placed behind the devices. To switch from a tablet layout to a chromebook layout a divider is removed and the remaining dividers are spaced out evenly. On the right side (figure 12) is shown how the dividers can be placed to accommodate each device type.

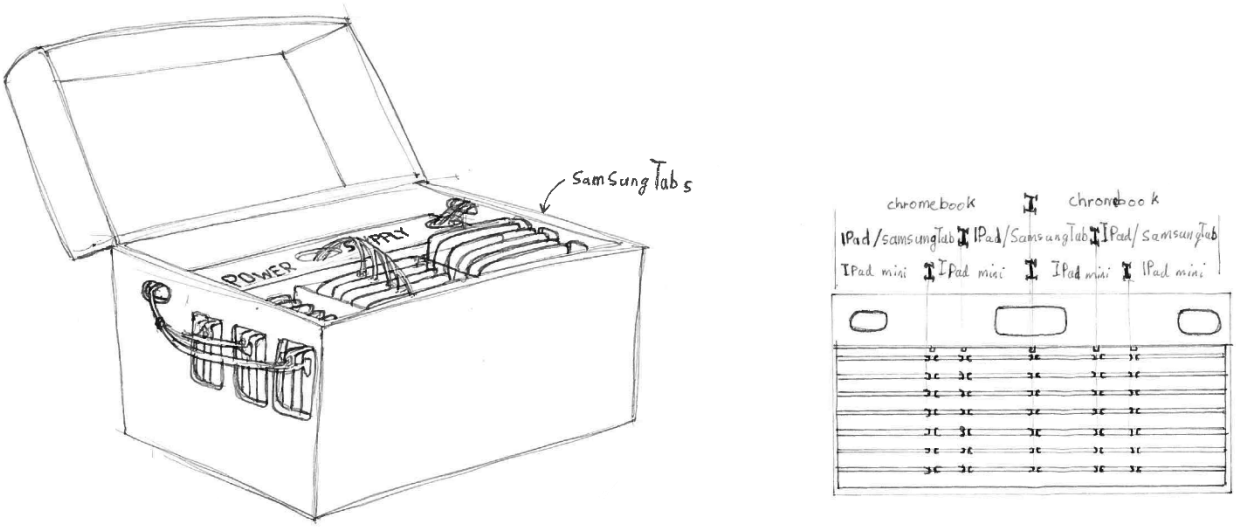

Fig 12 Case with externally wired cables

Figure 13 is an idea inspired by a pull case often used with smartphones. The user tucks the phone into a pouch. To get it out again the user has to pull a strap. The strap then pushes out the phone until it is halfway out. Now the user can grab the phone completely out of the case. This principle is also used in figure 13. The dividers are arch shaped. Underneath the arch sits the pull strap. From front to back the arch height gets lower and lower. When the strap is fully pulled down it can latch onto a hook. This allows for the devices to be presented to the user in descending order (see figure 13, bottom left).

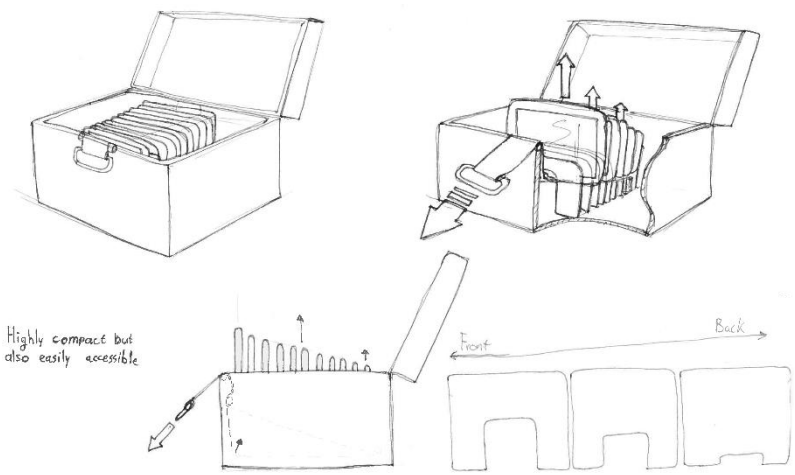

Fig 13 Case with a pull strap

Figure 14 has a two device layout. On the left it houses chromebooks and on the right it houses Ipads. This idea is based on configuration 2 from paragraph 3.1. The devices have their USB ports faced towards the centrally placed PSU. A wedge is placed for the Ipads so that USB ports are easily accessible.

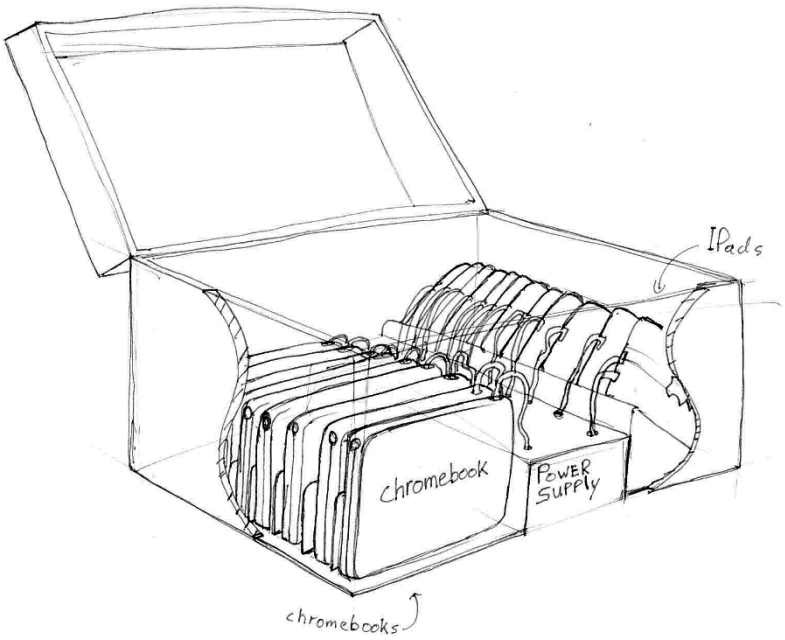

Fig 14 Two device layout

Figure 15 depicts a foam with milled slots for the devices. At the top some extra space is cleared to allow the user to grasp the device more easily. The slots allows for a snug fit but it is only supports one device-type. A different type of device won't fit.

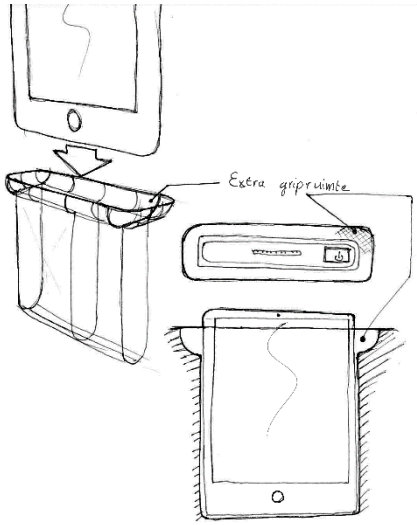

Fig 15 Extra gripping space

Figure 16 emphasises on a way to snuggly fit a device without having to adjust when switching between devices. On both sides are flexible straps placed under tension. Provided that the width of the devices only vary by a couple of millimetres this idea can hold almost any tablet.

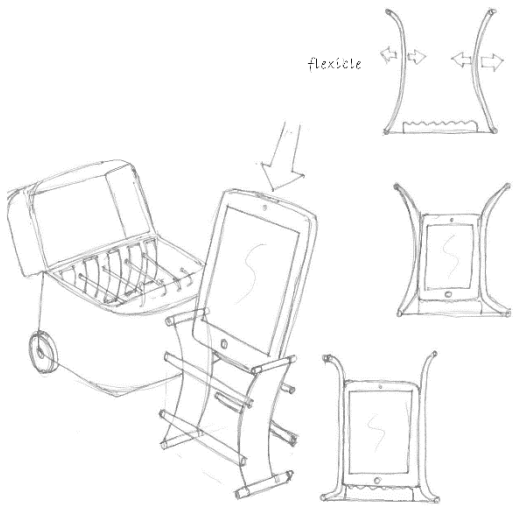

Fig 16 Flexible straps

Figure 17 is another, more mechanical, way to store the devices. A torsion spring presses the sides inward. When a tablet is inserted it clamps the device. Just like the previous idea this is only applicable when device width varies only a couple of millimetres.

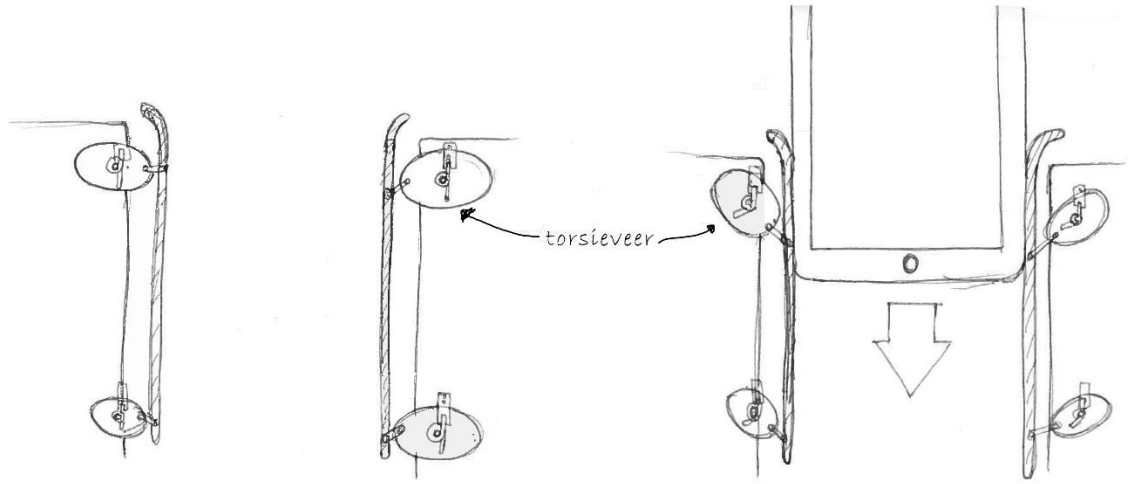

Fig 17 Torsion spring loaded clamps

Figure 18 has plastic pins which can flex. This allows devices with varying width to fit snuggly

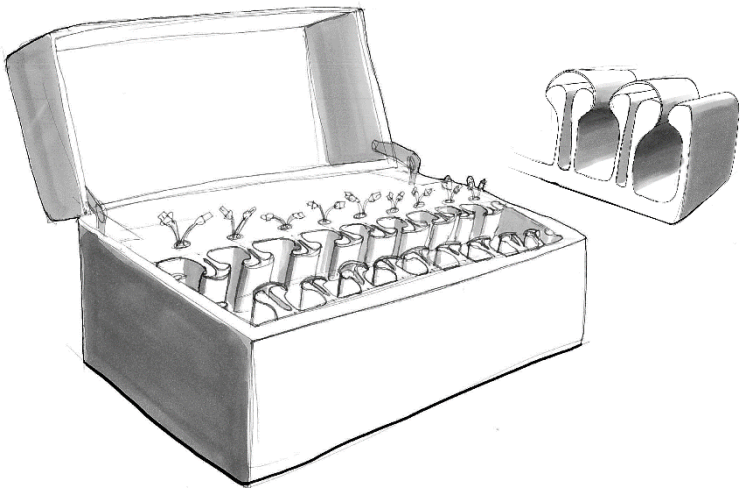

Fig 18 Plastic pins

Figure 19 has a very different approach. It consist of booklets containing up to 4 tablets. Each booklet has 4 USB cables protruding from the top. When these are connected to devices they subsequently can be placed into the case. The booklets can then be connected with the PSU in the case.

The booklets allows teachers to provide one for each group of students. After completing the assignments the students store the tablets in the booklets. One student per group walks back to the case and hooks it up. This cause less congestion at the end of class since fewer students have to stand up and walk to the case.

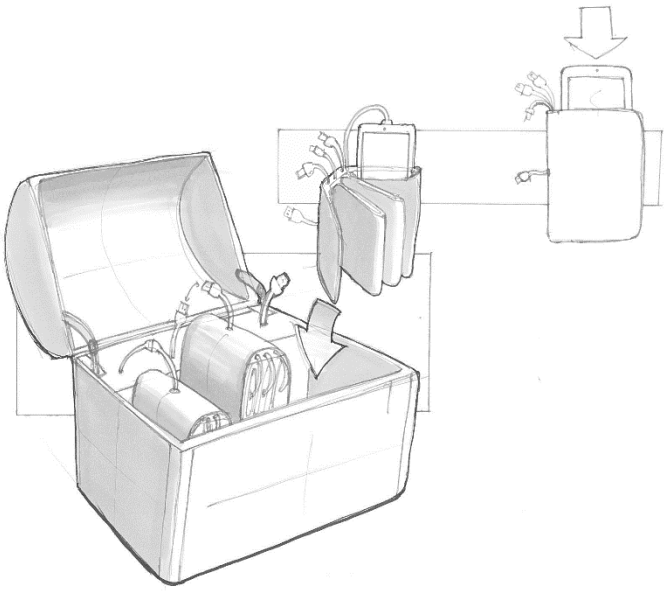

Fig 19 Booklets

Figure 20 is a suitcase with a harmonica design. When opened the devices can be pulled out. The bottom houses the PSU.

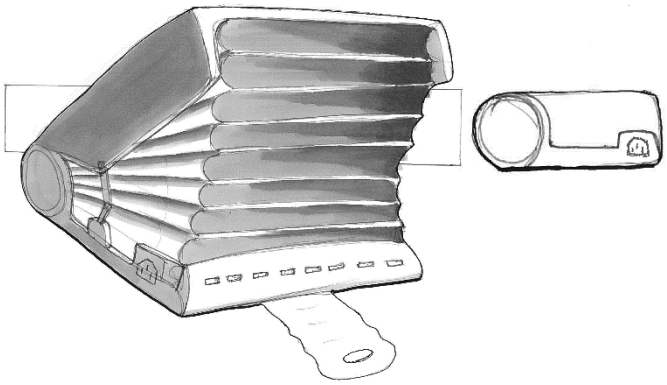

Fig 20 Harmonica case

Figure 21 relies on stretching sleeves. Each devices gets fitted one to provide extra protection. On the back it features a pouch. This slides over a slab which are mounted in the case.

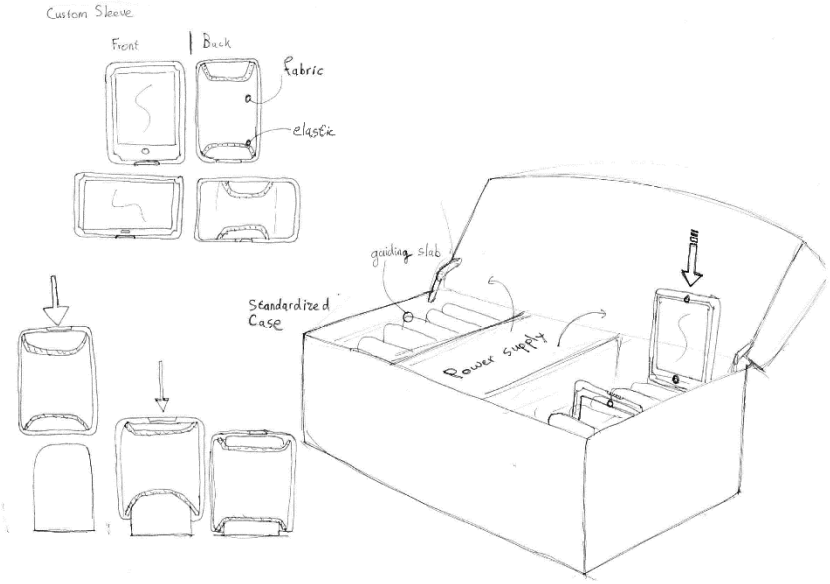

Fig 21 sleeve cover for tablet

Figure 22 has a sliding door. It can bend around the corner because is it flexible. The door is a felt strip is covered in shingles which are fitted into a guide. It is inspired by a garage door mechanism.

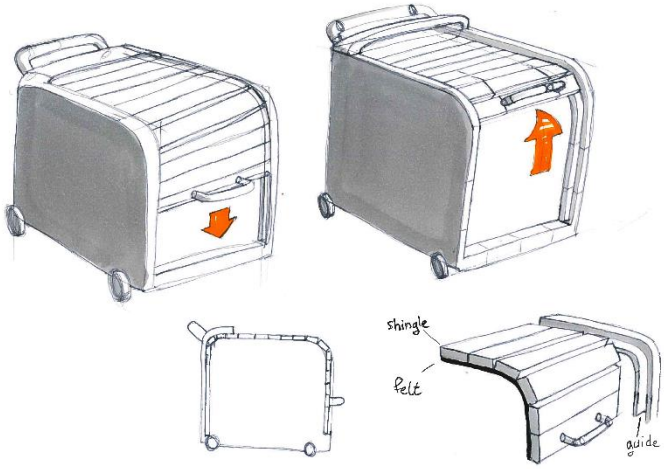

Fig 22 Garage door case

Concepts

In this chapter three concepts are highlighted and explained. Every concept is rated and the most promising one will be the base for the final design.

4.1 RATING CRITERIA

To compare the different concepts a list of criteria was made. Each criteria focuses on a different aspect of the design.

The criteria are based on the design requirements mentioned in paragraph 2.7.1.

Each concept can score up to five points per criteria. It is not a decisive rating system but offers a more comprehensive insight to each concept and allows for easier assessment.

Criteria	Meaning
Flexibility	To what extent can it store a variety of devices with minimal modification to the design (tablets, chromebooks, laptops, etc)
Mobility & Ergonomics	The design of the case should ensure the interactions with the case limit strain and don't the risk injuring the user
Feasibility	The complexity of manufacturing should be minimal. Costs are also taken into consideration
Maintenance	Installing and repairing parts has to be accounted for

4.2 CONCEPT ONE: DOUBLE ROW

This concept is a case with a fixed row of ribs in the middle and adjustable ribs at the front and back. The adjustable ribs create a slit through which the power cables can be pulled. The cables start at the bottom (PSU) and protrude through these slits.

The focus point is simplicity. It is based on cases already in Hulshof's portfolio. The advantage of course is that manufacturing would be simpler and more cost-effective compared to an untraditional design.

4.2.1 FLEXIBILITY

To accommodate for all the device types the ribs can be adjusted. To ensure a tight fit for every device it has to have a bandwidth ranging from the tablet-width up to laptop-width. While that is certainly possible to create it will not be the most space efficient with smaller devices.

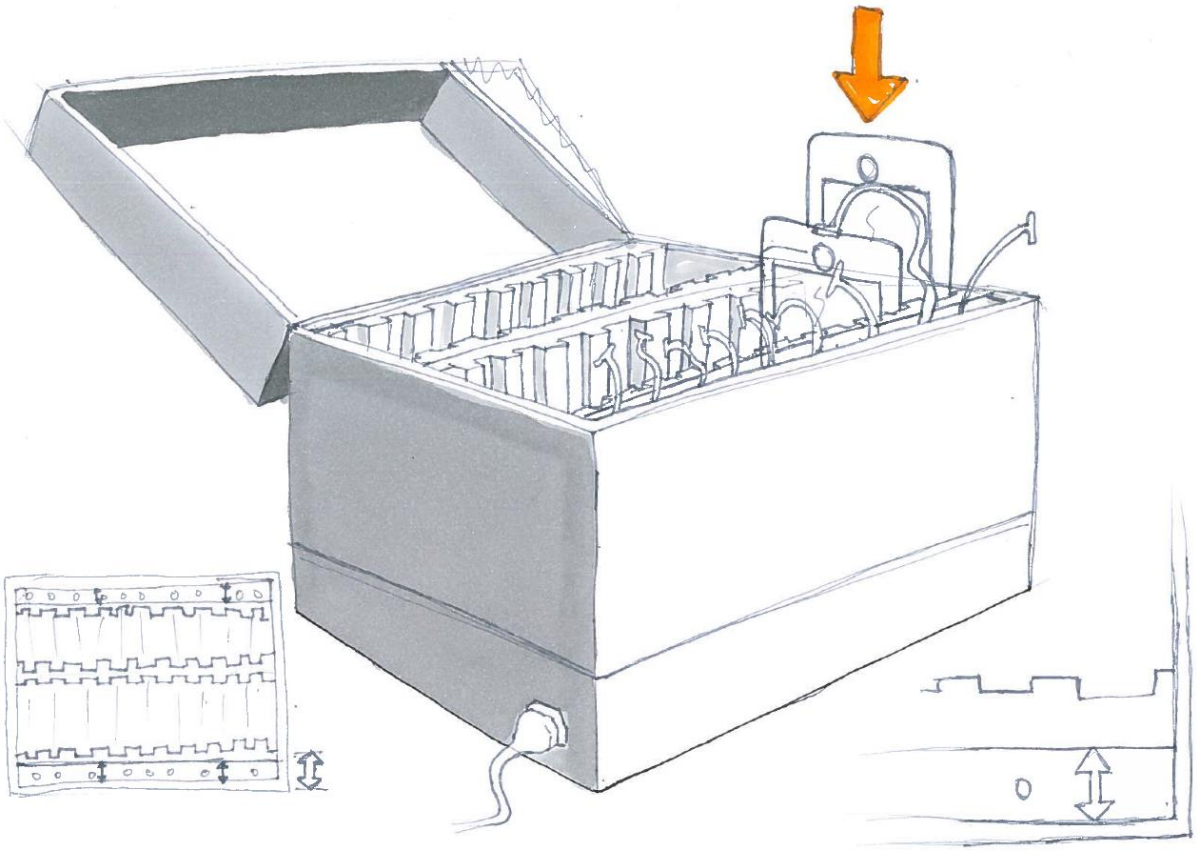

Fig 23 Double row

4.2.2 MOBILITY & ERGONOMICS
Transportation of the case is done via handles on the side. This way it can easily be lifted onto an elevation such as a table. Transporting from class to class may form a problem depending on the frequency and length of travel. For longer trips there is a telescopic handle.

4.2.3 FEASIBILITY
This certainly is its strong point. Based on existing designs it has been proven to be a working concept. The new addition is the interior. Instead of a fixed construction it has an adjustable ridge.

4.2.4 MAINTENANCE
Most likely the PSU is the component that requires attention most often. The PSU compartment houses all the electrical work and those need replacement from time to time. A hatch is placed in the back to access it. The hatch is locked so that a student cannot access accidentally.

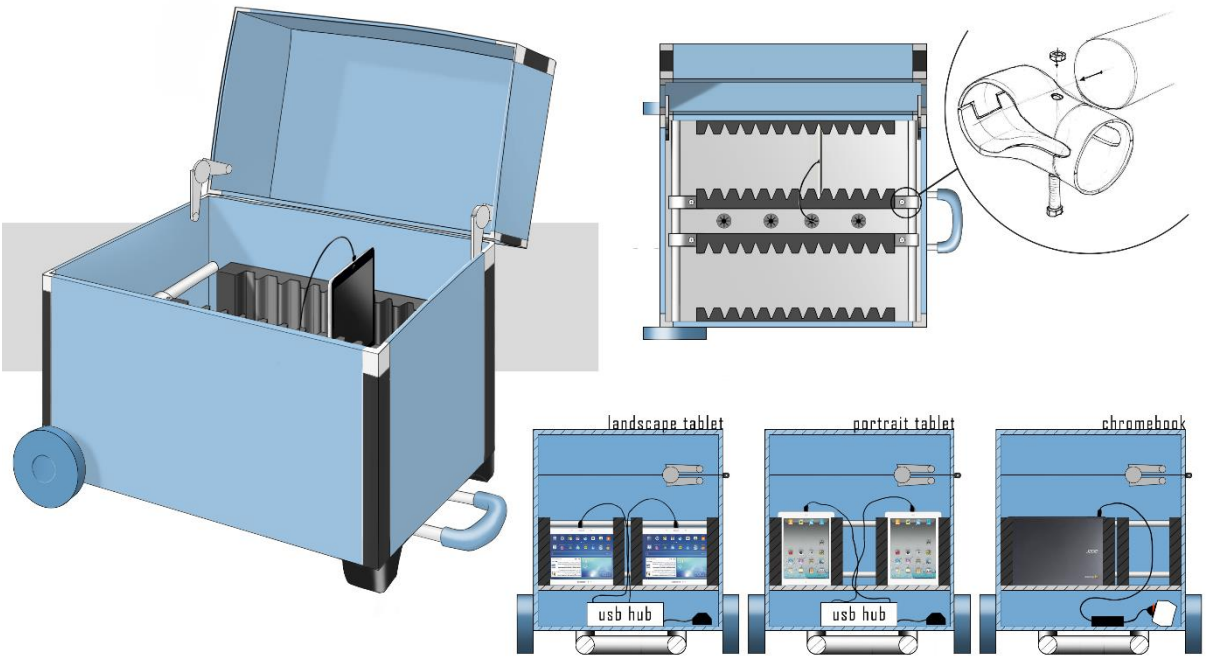

Fig 24 Concept double row variation. Adjustable ribs are now in the middle

4.3 CONCEPT TWO: DRAWER

This concept is based on a traditional cabinet drawer. An addition is a trolley on the back for transport. The handle is two-stage telescopic so teachers as well as students can move it with ease.

4.3.1 FLEXIBILITY

The drawers can be fitted with cheap interchangeable foam inserts. The top five most common sizes will have custom fitted inserts. All five insert sizes will be included with the case. After a couple of years when the devices are in need of replacement the user can find a fitting insert and replace them.

4.3.2 MOBILITY & ERGONOMICS

Mobility is a strong point as it is usable for users of all sizes. Large wheels allow it to roll over doorsteps easily compared to smaller wheels.

In contrast to other concepts it cannot present all devices at once, two to three at most. When all drawers are opened the drawer above prevents the user from accessing it. On the other hand, this might a benefit. The student has to wait for student before him.

Only when the drawer is closed the next student can open another drawer and grab his device. This mitigates the problem of overcrowding around the case.

4.3.3. FEASIBILITY

Generally speaking feasibility should not be a problem. Cabinet drawers have been around for many years and their design is generally straightforward. However, this concept incorporates a trolley. When the user quickly releases the handle it rotates around the wheel axis until the legs hit the ground. The moment created could lead to drawers flying open. A system has to be incorporated which prevents this from happening.

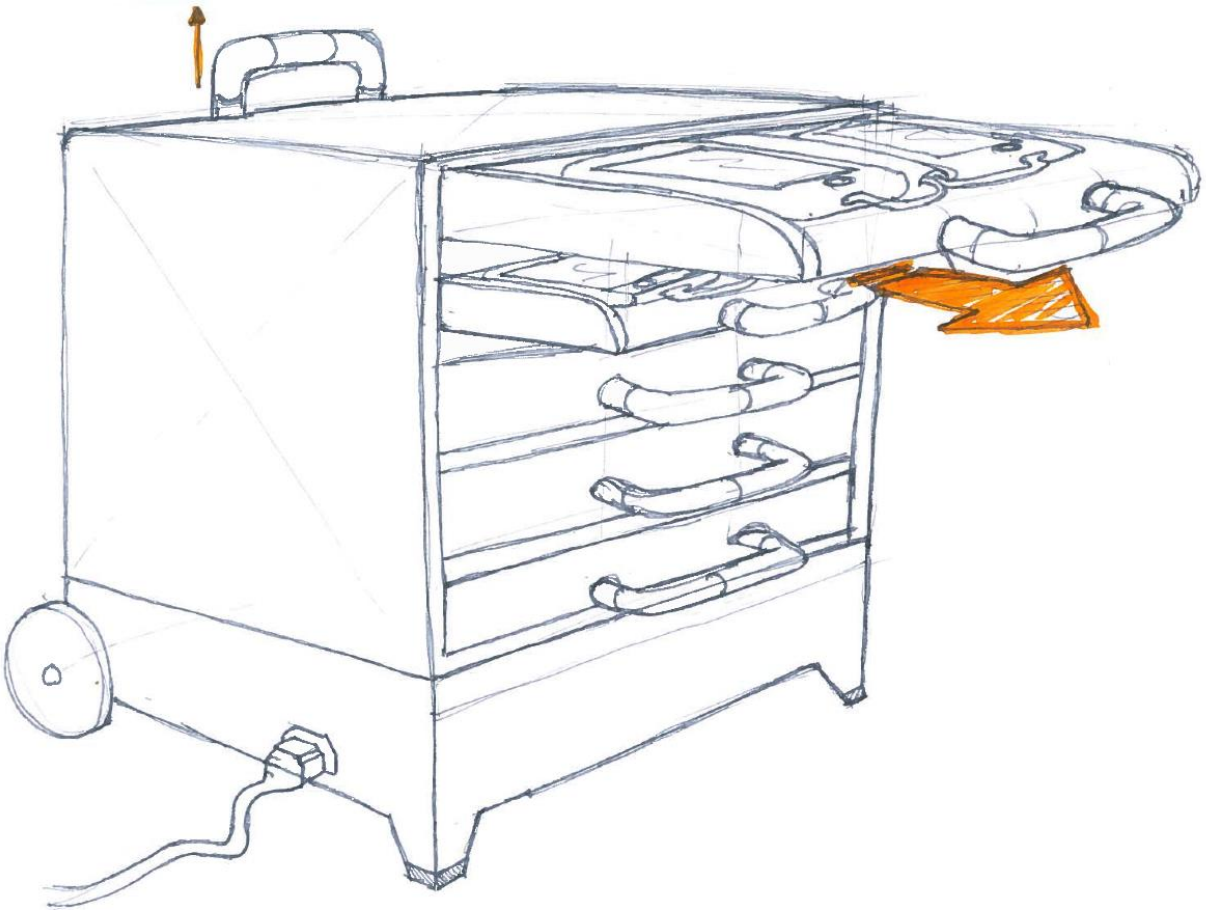

Fig 25 Cabinet drawer

4.3.4 MAINTENANCE

Access to the PSU is done via a hatch on the back. The hatch is locked so that a student cannot access it on accident. Wiring goes from the back of the drawers down into the PSU compartment. For the top drawer it would require a relatively long cable. Cable management is an important measure to minimize the need for repairs.

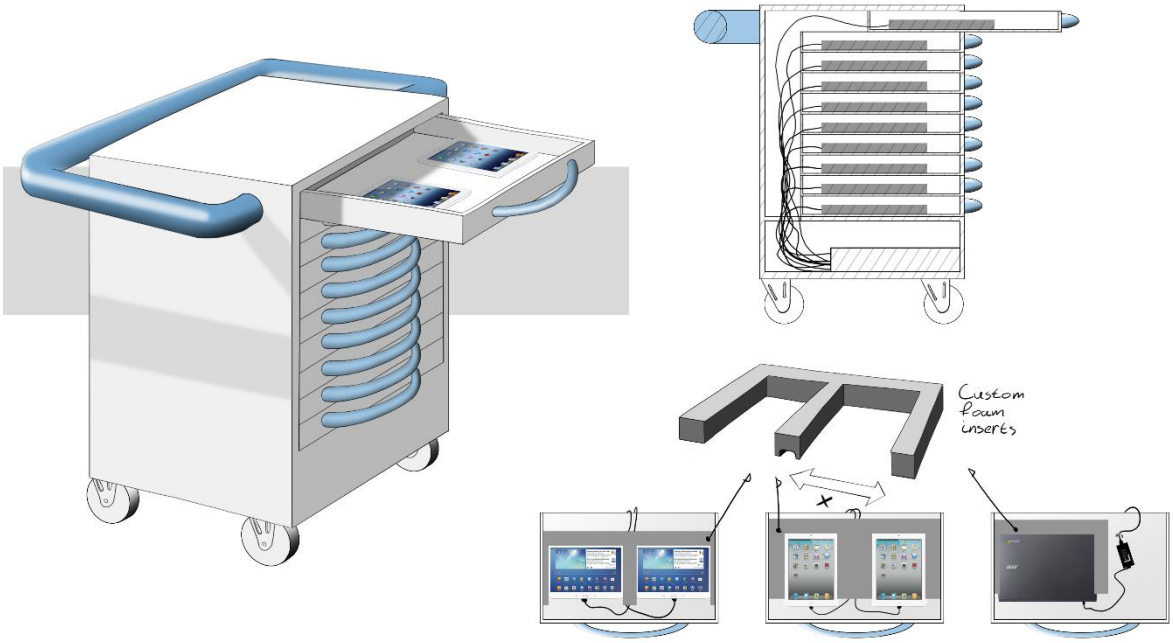

Fig 25 Cabinet drawer

4.4 CONCEPT THREE: RESTRICTED

This concept is restricted.

4.5 RATING CONCEPTS

A graphical representation is made depicting each concepts strengths and weaknesses (See fig 28).

It becomes evident that concept 1 and 2 have similar strengths and weaknesses.

For the next phase, refining the design, the strong points from concept 1 and 2 will be combined.

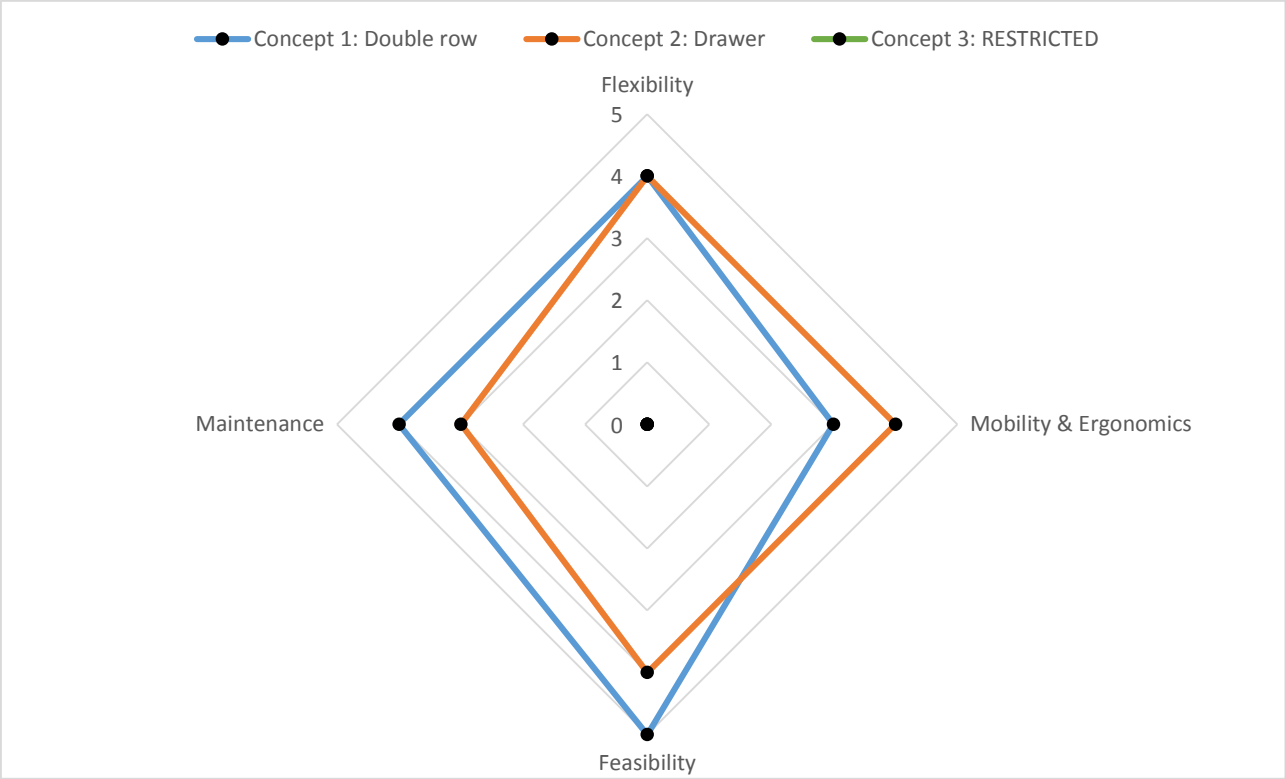

Fig 28 Points per concept

Final design

In this chapter the remaining problems are addressed which results in a final design. How the final design works is also explained. Along with the final design are a couple of colour studies.

5.1 FINAL DECISIONS
It was decided at this stage of the design process that the focus was shifted on the larger amount of devices. Six tablets or less can be fitted in the Flexkoffer by Hulshof. With the emergence of tablets it is likely that classes need storage for an entire classroom.

Furthermore, it was concluded that a USB hub was too expensive. Instead the PSU compartment is filled with multiple power strips. Every device has its own adapter. Fitting a USB hub is still a possibility but only if Hulshof's customer are willing to pay the additional cost.

5.2 REMAINING PROBLEMS
The design still has some unsolved problems. Below is a list of them.

- access for maintenance
- braking
- adjustment system
- cable management
- prohibit unauthorized access
- prevent lid from slamming shut
- prevent electrical equipment from sliding
- heat build-up

In the next segments these problems will be tackled.

5.2.1 ACCESS FOR MAINTENANCE
Problem: In the current situation it is hard to access the PSU compartment.

The goal was to give ICT employee clear access to the PSU. This not only makes his job easier it also promotes good cable management. When access is limited the ICT employee might not take the time to properly sort the cables. This can lead to more electronical failures.

A second lid is attached. This time on the bottom. The first iteration had the hinges located on the same side as the top lid (along the long side). This prevented the lid from being completely opened (see figure 29).

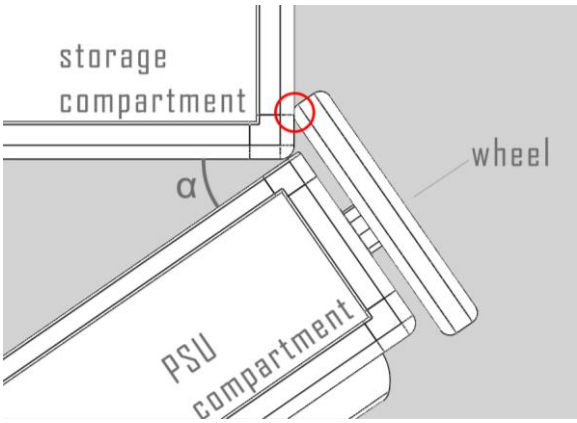

Fig 29 Wheel collides with compartment

Lowering or scaling down the wheel could prevent this problem. However the current size has to remain or else it will have difficulties handling doorsteps.

The solution was to locate the hinges on the sort side (see figure 30).

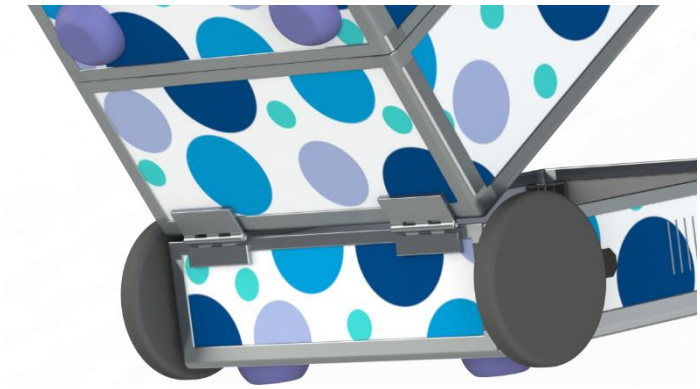

Fig 30 Hinges on short side

5.2.2 BRAKING

Problem: When the case is laying down it may still slide if pushed.

To counteract this a set of supports is placed. When the case is ready for transport it can stand upright. To prevent scuffs on the exterior two supports are placed. In this situations it has four contact points with the ground; two wheels and two supports

When the case laying on its belly it is supported by four contact points; all four of them are supports. The wheels are slightly lifted off the ground. The four contact points are chosen in favour of a flat surface. Although it might provide more friction it could be more unstable on an uneven floor.

To flip it back upright the user grabs the handle and pulls it up. From then on the user can extend the telescopic handle and transport the case.

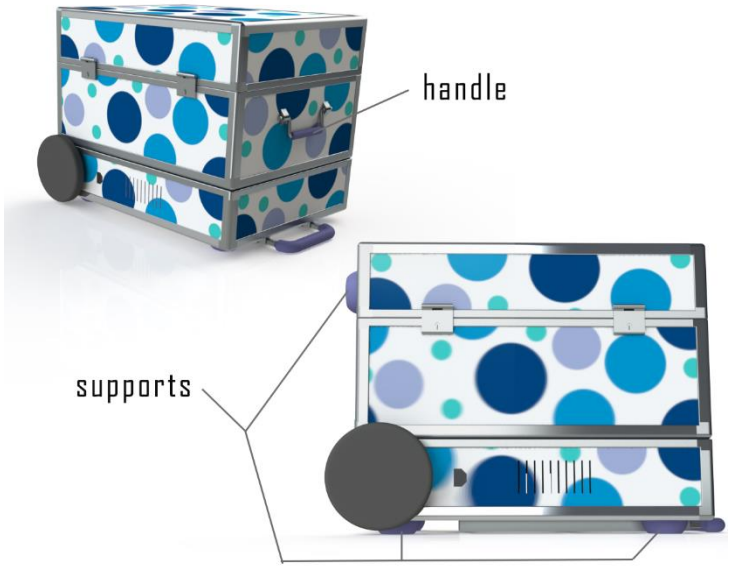

Fig 31 Support and handle

5.2.3 ADJUSTMENT SYSTEM

Problem: The bandwidth of the system is too narrow. It cannot support small and big devices with the same system.

First step is setting the limitations. Based on the analysis (chapter 2) it is decided that the storage capacity will be up to 24 tablets or 16 laptops.

For the variations in width the ribs are redesigned. When the ribs are straight it can only fit one width perfectly. The solution is slanted ribs. The length is adjusted so that the device can fit properly

The final interior is available in three variations (see figure 33). All these fit in one identical case. The 12 tablet variant has spare room for peripheral devices.

The foam layers in the middle are adjustable. The other layers are fixed to the case. The middle layers are mounted to a system that slides along the tubes (see figure 34). When the correct position is found it can be tightened to prevent sliding. This is done by screwing the clamp shut with a bolt (see figure 35).

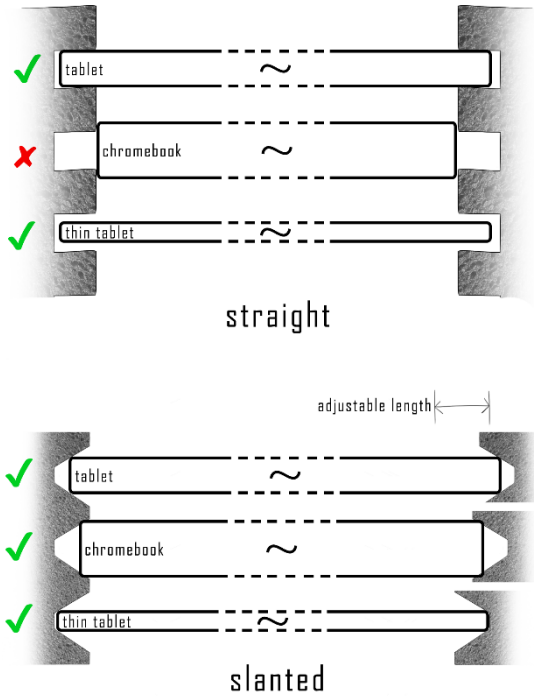

Fig 32 Straight v slanted ribs

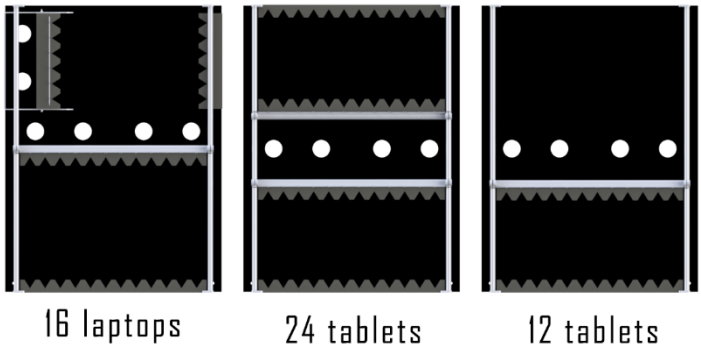

Fig 33 Interior variations. Top views of the bottom plate and the adjustment system

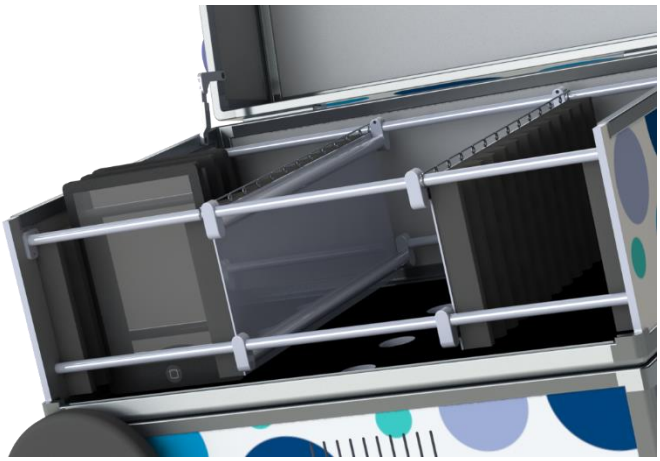

Fig 34 View of interior of the storage compartment

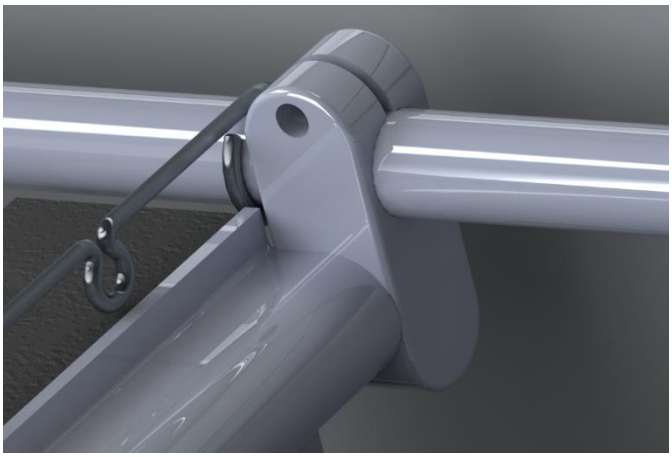

Fig 35 Clamp

For the laptop variant it is slightly different. It has the same system for the first twelve laptops but the other six are placed differently. The reason for this is that two rows cannot fit in the case.

There is a separate adjustment system for the remaining six tablets.

Fig 36 Chromebook layout

5.2.4 CABLE MANAGEMENT
Problem: The entangling of the power cables.

The cables come from the PSU compartment and run through holes in the bottom floor (see figure 33). From there they need to be plugged into the devices.

A couple of iterations were made to feed the cables up to the top and present them close to where they need to be plugged in.

The first one is made of two strips hinged together. A couple of cut-outs allow for the cables to run through.

The second idea is one with two overlapping platforms. The power cables get squeezed between the platforms. The top platform is a tensioned fabric pinching the cables down on the lower platform.

The third one is a stretching fabric that spans across the gap between the two adjustable foam pieces. There are rings sown into the fabric. The power cables are fed through them.

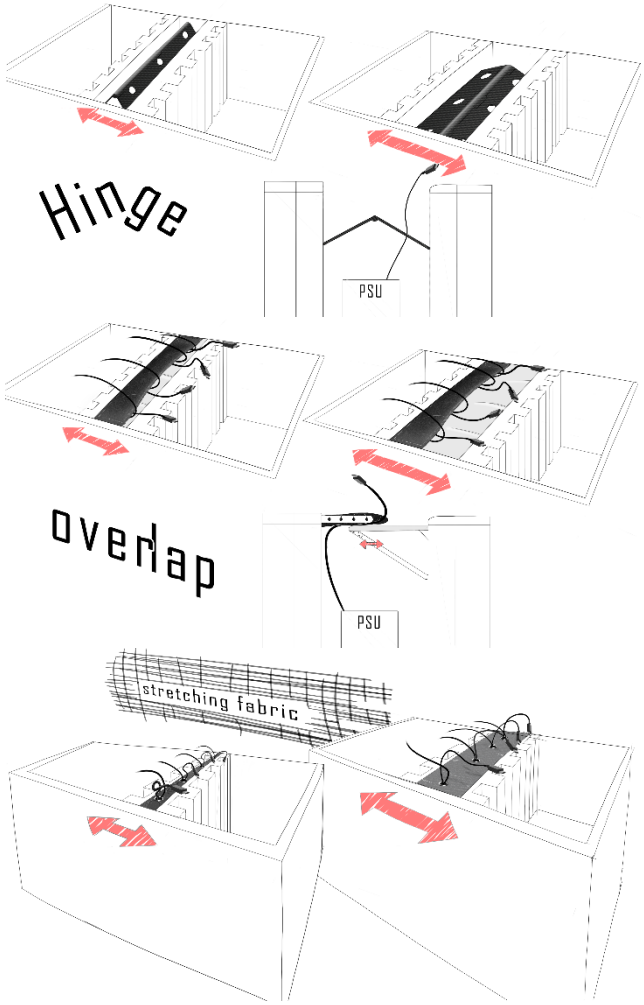

Fig 37 Cable holder solution ideas

The final choice was a simple cable holder. A bundle of cables are wired through a hole in the bottom plate. Each cable individually is inserted into the rings of the cable holder. The cable holder itself is attached to the tubes from the adjustment system.

Fig 38 Cable holder

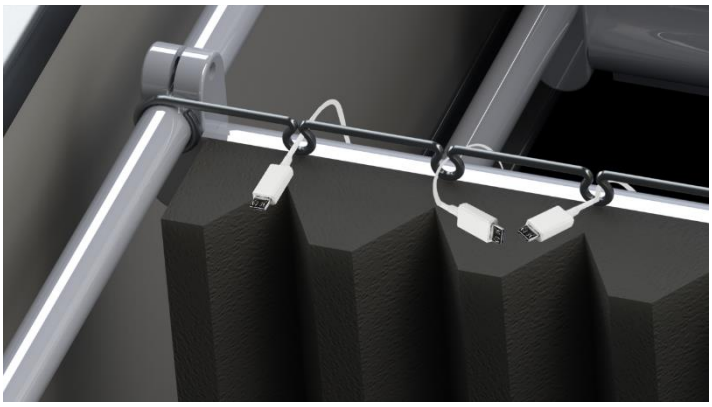

Fig 39 Cable holder with cables mounted into case

5.2.5 PROHIBIT UNAUTHORIZED ACCESS

Problem: The students are not allowed to access the electrical compartment. Likewise, access to the devices is not allowed when the case is stored.

First off, to access the devices a student simply opens the top lid and grabs one. On the other hand, a student is not allowed to access the PSU compartment. To prevent this a set of bolts is used to ensure the PSU lid remains shut. Brackets placed on the corners of the bottom lid line up with a screw hole on the bottom plate. A bolt secures the two pieces together. Only somebody with a screwdriver can open up the PSU compartment.

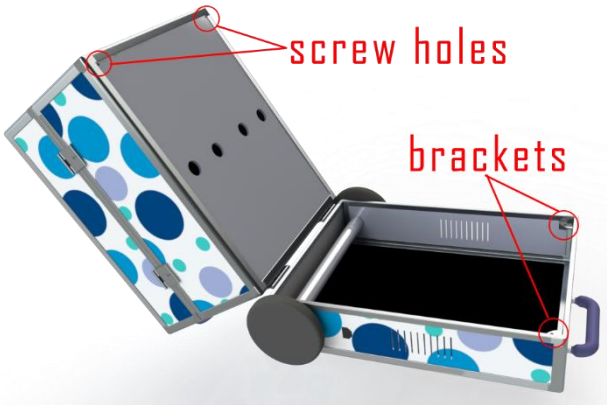

Fig 40 Placement of screw holes and brackets

Secondly, it is important that the devices are not stolen. To tackle this problem the top lid has two key locks. This way, nobody without a key can open the case. This does not solve the problem entirely. The case itself can also be stolen and forced open once stolen. This problem is solved by supplying the case with a safety chain. The case can be chained to a radiator for example.

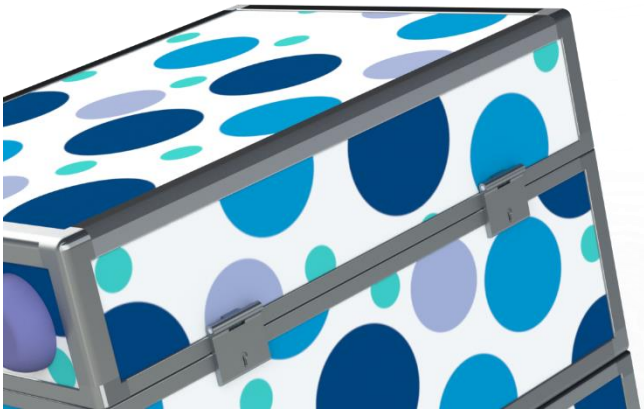

Fig 41 Locks

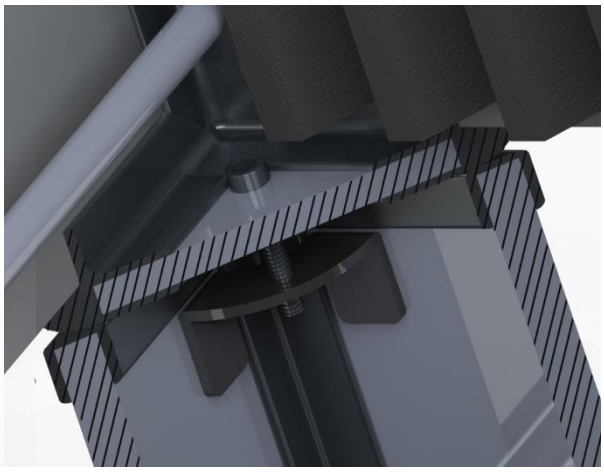

Fig 42 Cross-sectional view of bolt and bracket securing the lid to the case

5.2.6 PREVENT LID FROM SLAMMING
Problem: When the lid is not opened completely it falls backwards when it is over its tipping point.

This problem is solved by adding a hinge (see figure 42). This prevents the top lid from falling back.

Fig 43 Hinge

5.2.7 GLIDING EQUIPMENT
Problem: When the case is tilted for transport the adapters move around in the compartment.

To avoid this from happening the PSU compartment's floor is made out of Velcro. The power strips have Velcro strips glued to them to stick on the bottom plate.

Fig 44 Look inside the PSU compartment

5.2.8 HEAT BUILD-UP
Problem: The electrical equipment produces heat. This heat energy needs to dissipate to comply with safety regulations.

To combat this problem two air intakes are added. A fan sucks out the hot air. The air intake on the opposite side sucks cool air into the compartment. The intakes are placed on the same side as the wheels. When the case is parked against a wall the intakes are not blocked because of the protruding wheels.

5.3 MATERIALS
All the panels are made out of MDF wood. The panels have stickers on the outward facing sides. The frame is made out of aluminium extruded sections. The foam is made out of a soft rubber. When a device is inserted it is slightly pushed in to create friction. This friction prevents the device from sliding when it is being transported.

Fig 45 Colour studies

5.4 COLOUR STUDIES

To appeal to a wider group of customers three variations are made of the exterior. Two colourful ones aimed at schools and one demure one.

During my time at Hulshof it came apparent that there are also potential customers who need a tablet case for giving workshops. Although it was not the primary focus of this design it can still appeal to those customers. The carbon variant was created for this target group.

The other two are marketed at schools. The use of vivid colours and patterns (bubble) are based on products found in classrooms and the collages (appendix B)

5.5 INSTRUCTIONS

In this paragraph the key aspects of the design are highlighted. A comprehensive visual storyboards tells the user what to do and how to do it.

5.5.1 GRABBING/INSERTING DEVICE

First off, is grabbing or inserting a tablet. This is the most common task and it does not really require a storyboard to explain. When a student wants to grab a device he unplugs the power cable and slides the device out.

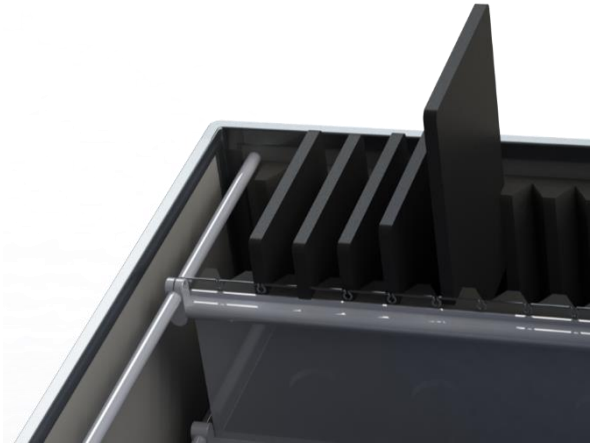

Fig 46 Grabbing/inserting device

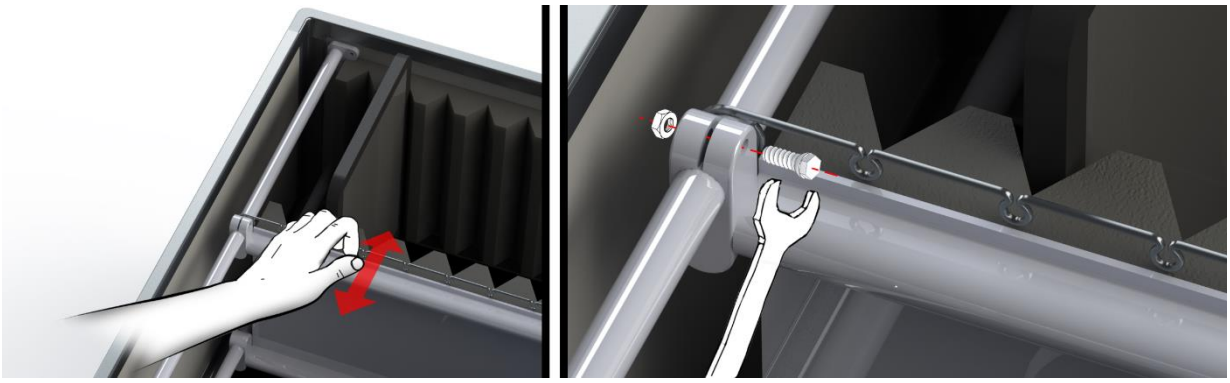

Fig 47 Fixing the adjustment system

5.5.2 FIXING THE ADJUSMENT SYSTEM

This task is important but is not done often. It is carried out by an ICT employee or a teacher. First step is to grab a device and place it between the ribs of the foam. Then slide the adjustment system so that the device is hold in place with a little pressure. Lastly, screw the bolt tight so that the clamp grasps onto the tube. Now the ICT employee can release the pressure. The case is now properly adjusted.

5.5.3. ACCESS PSU COMPARTMENT

This is also a task that is done by the ICT employee. When an adapter needs replacement access to this compartment is essential. Firstly, unscrew the bolts from their bracket. They are located in corners of the bottom floor. Then the PSU compartment can be opened. Maintenance to the electrical components is now possible.

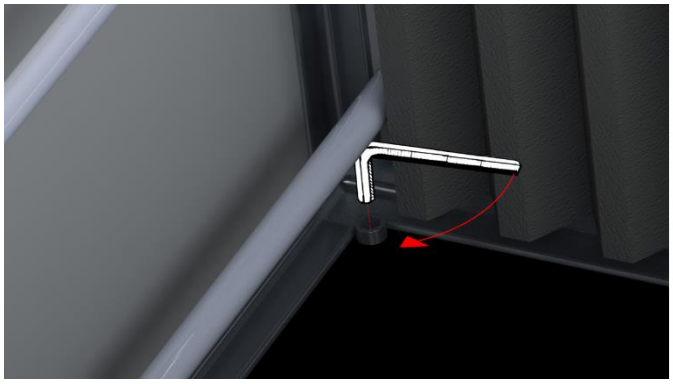

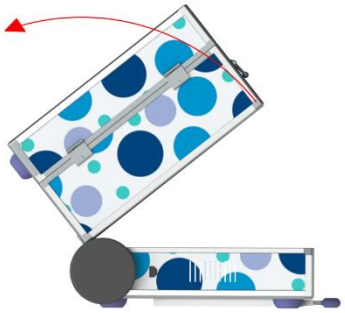

Fig 48 Access PSU compartment

5.6 EVALUATION

Now that the design is complete and fulfils all the design requirement it is time to reflect and determine if there are bottle necks in the design.

Firstly, there are some design changes to the foam. The old foam was made to measure the exact dimensions of the devices. This meant that is was not very suitable for a wide variation of devices due to different dimensions. However, it had a large contact surface with the device and thus providing more friction. The new foam touches the device far less (see figure 49) resulting in less friction. With a quick mock-up from spare foam it was tested to make sure it would provide enough friction. The first results ensured the tablet remained in place applying little pressure. The results are not conclusive as the test was quite primitive. To ensure that the device do not tumble when the case is lifted into an upright position building a prototype is essential

Secondly, there are some concern about the brackets. These two brackets prevent the bottom lid from being opened. The concern is that it is not sure if they will break or not under normal usage scenarios. When the case lies on its bottom (side where the telescopic handle is mounted onto case) the aluminium trim supports the weight of the top compartment and the top lid. But when the case is being transported the bracket and bolt are being pulled on by the weight of the top part of the case. In the scenario that is used for the simulation it is decided that the force exerted on the brackets is 500 newton. This would mean the top part (storage compartment and top lid) weigh 100 kilos (overestimation of the real world scenario) and that the case is being held up with the bottom facing upwards. For the simulation the area around the hole, where the bolt contacts the bracket, is subject to 500 newton. The bracket is secured to the case at the two downward pointing flaps. These are the fixtures for the simulation.

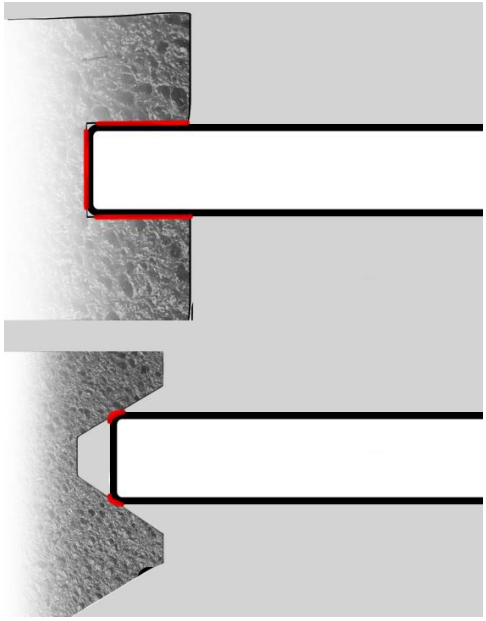

Fig 49 Foam contact with devices

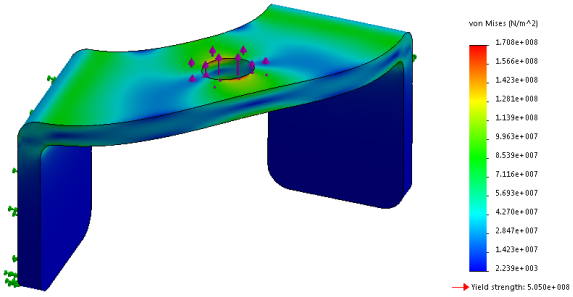

Fig 50 Stress plot of 7075-T6 aluminium bracket

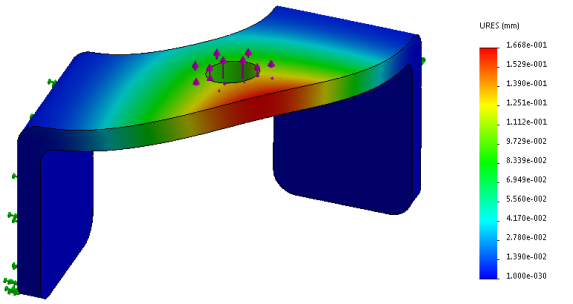

Fig 51 Deformation plot of 7075-T6 aluminium bracket

The first two iterations where done with common aluminium (6000 series) and plain carbon steel. Both simulations did not exceed the yield strength but reached about 80% of that limit. To ensure the brackets would not break it was determined that 7000 series aluminium would be a better choice. The results of the simulation of the 7075-t6 aluminium are found in figure 50 and 51. The deformation in this figure is exaggerated to give a clear indication which way the bracket bends. The actual deformation is negligible.

5.7 CONCLUSION

The goal of this project was to design a storage solution for tablets and laptops used in the classroom. Due to the fact that using such devices in the classroom is an emerging occurrence there is not much known about those kind of storing options. The first stop was to familiarise with the environment where it will be used. After gathering the required information the design requirements were established. Subsequently, the first ideas where visualized. Through several iterations and refinements this lead to the final design.

The design bears some similarities with existing Hulshof cases. The fact that Hulshof already produces aluminium sectioned cases reduces the time to market. This could be vital for such a relatively new market. There is not yet a company dominating the market. Entering the market as early as possible could prove to be an advantage over the competitors who have not yet established a foothold in the Dutch or European market.

The next step would be building a prototype. If no problems emerge from testing the prototype it can enter manufacturing.

Fig 52 Final design

Reflection

This reflection is focused on elaborating and clarifying design choices made. The human-product interaction and design language were covered briefly up until now. This reflection aims at those two topics.

6.1. HUMAN-PRODUCT INTERACTION
The tablet case can be found in the classroom and hallways in an elementary school. How it interacts with its environment and its users is explained in this paragraph.

The tablet case can be placed anywhere in the classroom. Some teachers might prefer to place it in the middle of the classroom while others might place it near the book shelves. Figure 1 shows two possible scenarios.

In the first picture the case is placed near the teacher, almost against the wall. The teacher can even plug the power cord into the tablet case if had forgotten to do so the day before. This location also allows the teachers to see who comes and goes with the tablets. When the teacher notices someone packing up early and walking past he can assign that student some extra assignments or grant him extra time. The placement of the case lets the teachers know who finishes early and can help students having difficulties.

In the second picture the case is placed centrally. The teacher has less oversight on what is going on with the tablets and the tablet case. It gives the students a sense of responsibility. In the first picture the teacher has the tablet case always in sight and can check if the students are plugging back in the USB cable. Placing it centrally gives a sign that the teacher trusts that everybody puts back the device and plugs back in the USB cable when leaving.

Placement in the classroom can have different effects on how the classroom deals with working with the tablets. It is up to the teacher to decide where he wants it.

Figure 53. Two classrooms with the tablet case

It also allows the teacher to place the case away from the students who get distracted easily. If a student finishes early and they walk by a student who gets distracted easily it can negatively impact their performance in school. The teacher places the case on the opposite side of the classroom so there aren't too many distractions for those students.

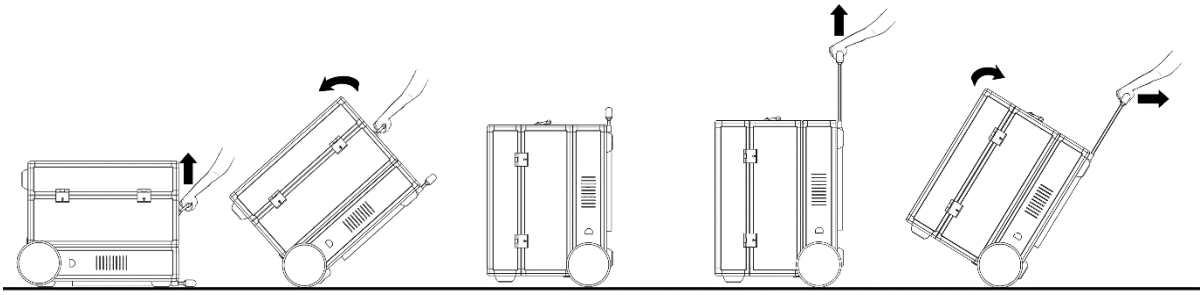

Figure 54. Transporting the case. Step by step.

There a few important interactions with the tablet case that are discussed in the following section.

Transport
First off, is getting the case ready for transport after a day of use in the classroom (see figure 2).

The first step is ensuring the lid is closed properly. If it is closed correctly the user grabs the side handle. It is located 30 cm above the ground so he doesn't have to bend down all the way to the ground. He pulls the handle up and the case rotates around the wheels. When it is flipped 90 degrees the telescopic handle is extended to the right height. The user then grabs the handle onehandedly and pulls the case behind him as he walks through the hallways of the school.

Gathering around
The next aspect is gathering around the case. The case can be approached from three sides and has room for about four students at the same time (see figure 3). The time of the interaction is relatively short (<5 seconds) because a student pulls out the USB cable, grabs the device and walks back. In elementary schools students often sit in groups of around 4. The teacher can decide which group gets to go when. This is to prevent overcrowding possibly resulting in pulling and pushing around the case.

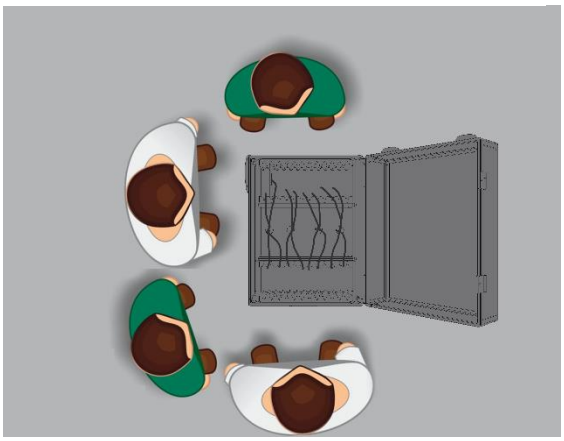

Figure 55. Gathering around the case

Plugging in cables
Another common interaction is plugging in and out the USB cables. Plugging out the cable can be done carelessly. The cable holder ensure it doesn't fall to the bottom of the case and entangle. A nudge *(Dorrestijn, 2011)*, a push in the right direction, is incorporated into the design of the cable holder. It not only prevents cable from entangling it also presents the USB cables to the student. Each tablet space has one cable presented near it. The goal is to prevent the students from becoming nonchalant and not bothering to put back in the cable.

Figure 56. Cables gathered individually and located near USB port

New insights
Taking a closer look at the human-product interaction allowed me to adjust some flaws that were overlooked earlier. In the current situation the tripolar (c13) power plug was located on the same side as the opening of the lid (see figure 5).

Figure 57. Wrongfully located power port

This means when a student goes to grab a tablet and the power cable is plugged in he can trip over the cable easily. To prevent this problem the plug was relocated to the other side of the case. Now it is on the same side as where the lid is hinged. Students cannot access the tablet from this side since the opened lid obstructs it. That is why it makes more sense to put the cable on that side of the case. When the case is placed in the classroom and ready for use it is not required to be plugged in to a wall outlet but the teacher can choose to do so if he thinks it is necessary. This could be the case when some devices are not in use and are in need of charging.

Also when looking at the human-product interaction, it was found that the telescopic handle could extend far too long. The most ergonomic height for a trolley handle, or pulling, is between knee and hip height (Karwowski, Waldemar, and William S. Marras, 1998). With DINED, a anthropometric database, the mean hip and knee heights of Dutch 8 -12 year old children can be found. A height of 75 seems suitable. The telescopic handle is two stage so it is also possible for the teacher to transport the case at a height of 100 cm (Karwowski et al).

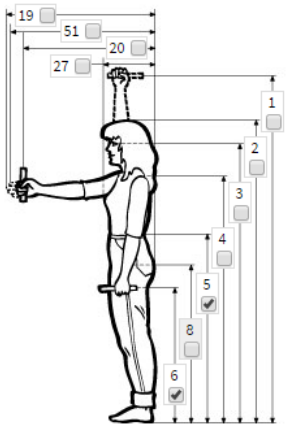

Figure 58 anthropometric database values

Scenarios
Three users were identified; student, teacher and maintenance worker. Each has different tasks and handles it in their own way. For every type of user a scenario was made.

Student scenario
Tom is a sixth grade student and is about to start his day. His first lesson is math. After talking for about an hour the teacher tells everybody which assignments need to be completed. The assignment is to practice tables. To prevent overcrowding at the tablet case the teacher has divided the class into groups. When Tom hears his group number he and the other group members stand up and walk to the front of the classroom. Tom reaches for a tablet and unplugs the USB. The cable is clipped in a holder so it doesn't fall to the bottom. Now that the cable is removed Tom can take out the tablet. The tablet is cushioned between rubber ribs but it comes out without much effort. Tom turns around and walks back to his table. The tablet is already turned on and fully charged. Upon logging in Tom can resume with the exercises he left off last time. After 30 minutes Tom completes all his assignments and walks back to the tablet case. He inserts the device in to an open

slot. The rubber is contracted when Tom pushes in the tablet. The tablet is now snuggly fitted in the case. Tom grabs a USB cable from the holder and inserts it back into the tablet. Tom walks back to his chair and sees he has 10 minutes to spare. Just enough time to finish the book he was reading.

Just before lunchbreak his teacher, Claire, walks up to him and asks if he could bring the tablets to the fifth grade classroom. Tom agrees and when the bell rings he walks over to the tablet case. Claire already had counted and checked if every device was present. She closes the lid and lets Tom lift up the case by the side handle. He extends the telescopic handle and walks over to the other classroom pulling the case behind him. The teacher thanks Tom for his help and Tom goes outside to the playground for his lunch break.

Later that day the tablet case is returned to Tom's classroom. He is reminded that he has to finish his report on dogs. At 3 o'clock every student can work for themselves to complete there week assignments. Tom needs a tablet to complete his report. He walks up to Claire and asks if he can take out a tablet to resume work on his report. Claire agrees and Tom finishes his report before the end of the day. He puts back the tablet and Claire asks Tom if all tablets are back in the case. Tom does a quick count and confirms every tablet is in the case and charging. He is glad he could use the tablet or else he had complete the report at home. Tom goes back to his seat. As he sits down the bell rings. Knowing he does not have any homework he runs outside and starts playing with his friends.

Teacher scenario

Claire is a sixth grade teacher and her class recently started working with tablets. Claire was a bit sceptical at first but now can't imaging teaching without them. Along with the introduction of the tablets came a tablet case. It houses all tablets of all her students.

Just before class starts Claire heads over to the storage room. She walks over to the tablet case and unlocks the chain. It was chained to a radiator pipe. This extra safety measure ensures that it is very difficult for thieves to steal the devices. Claire has adapted her way of teaching since the introduction of the tablets. The thought that the tablets are safe comforts her. She wouldn't like to go back to her old way of teaching, without the tablets. The next step is unplugging the power cord. The tablet case charges the devices at night so they are ready for use in the morning. With the case free from the chain and wall outlet she extends the telescopic handle and walk to her classroom while pulling the trolley. She positions the case in front of the classroom and opens the locks. She doesn't open the case yet. She doesn't want the students to grab a tablet before she has explained the assignment. Within the next few minutes the classroom starts to fill with students. When the last one sits down Claire starts her lesson.

After explaining the assignment Claire opens the lid and announces which group can grab a tablet first. She continues announcing until every students has a tablet. While the students are practicing their new learning material Claire grabs her tablet. She opens the math app and can see the progress of every student. The app indicates Peter is having difficulties with his math problems. Claire walks over to Peter to help him understand the problem. Before using tablets Claire often noticed too late that a student was lagging behind. By the time she checked everybody's assignments it was often to late for the troubled students to catch up. Claire is very thankful for the new system it saves her a lot of work and she can easily shift her focus to the students who need help.

Just before lunch break Claire remember that Yvonne, the fifth grade teacher, had

reserved the tablets for her class. When the bell rings the students pack up their stuff and go to the playground. Claire can see in one glance that all tablets are back in the case. She asks Tom, a student, to bring the case to Yvonne. Tom agrees and is glad to help out.

Two hours after lunch break a student from the fifth grade knocks at the door of Claire's classroom. He is here to bring back the tablets. Just in time for the next lesson. Students of the sixth grade can now work on their week assignments on the tablet. At the end of the day Claire walks up to the tablet case. At a glance she can see all tablets are present and plugged in. She closes the lid and locks it with her keys. She grabs the side handle and flips the case 90 degrees. Then she extends the telescopic handle and walks out of the classroom. She locks the door of the classroom behind her and walks back to the storage room while pulling the case behind her. When she arrives she plugs the power cord back into the case to charge the almost depleted tablets inside. She can hear the soft humming of the cooling fan inside. Finally she runs the chains through the handlebar and locks it to the radiator pipe. Knowing the tablets are safe and sound she goes home lightheartedly.

Maintenance worker scenario
Hank is an office worker at a small elementary school. The sixth grade teacher, Claire, came to him with a problem. She opened the tablet case and found that one tablet was completely out of charge.

Since the school is very small it doesn't have an IT department. Hank isn't an IT employee but agreed to have a look at it. At the end of the day Claire brings in the tablet case to Hanks office. She points out that the tablet in the bottom left row doesn't turn on anymore. Hank has a look at the tablet. He switches USB cables with another tablet. And almost immediately the tablet comes back to life. Hank suspects that the USB adapter is broken. He unclips the defective USB cable from the holder and pushes it back into the PSU compartment. Hank sees two hexagonal screw heads in the corner of the bottom plate. He heads over to his toolbox and finds a suited key. He unscrews both. Now Hank closes the lid and locks it with Claire's keys. With the screws removed he can open up the PSU compartment. He flips the top over and sees a lot of power strips with adapters in them. He now has complete quick and easy access to all the electrical components. Hank knows that cables are often hidden away from sight so they are not entangled easily but most of the times this also means it is very inaccessible for maintenance. And the few times he replaced some cables it was a nightmare. This is not the situation with the tablet case. The cables are bundled and go from power strip to a couple of holes in the top compartment bottom floor. He notices the USB cable he pushed back earlier. He traces it back to the adapter and unplugs it. He grabs a replacement from the storage room and plugs it in. He wires the new USB cable back through the hole. He flips back the top compartment and opens the top lid. He screws back in the bolts and clips in the new USB cable. The whole process was completed in under five minutes. Hank brings back the tablet case to Claire. She thanks him for his quick response and she is delighted it all went so fast. She was worried she might not be able to use the tablets the following day.

6.2. DESIGN

A first glance play a major role on how a product is perceived. In this paragraph the design is discussed.

Robust

The outer metal frame is there to give the user the comforting idea that the devices are stored safely. The metal reinforced edges make the case look robust. It allows for the user to not worry when the edges of the case bump into the walls. Similar traits are seen in the document box in figure 7. This feature is often used to enforce the most vulnerable parts.

Figure 59. Reinforced document box

Protection is an important value to the owner of the tablets. However, it isn't playful and that is another important aspect. The primary target group are the students. They do not hold the same values as the people who own the devices. To appeal to the students the design has to be playful. One important thing to note is that a playful design is an aspect that is important but that does not mean that the students are encouraged to play *with* the case or the devices.

Playfulness

Design influences the human-product interaction. If the goal purely was to stop the students from playing with the devices or the case it would be as bland as possible. Looking at the collages from appendix B and figure 8 illustrate that it is possible to create a playful design but still remain functionality.

Figure 60. Collection of school products

Take for example the scissors in figure 8. It differs on a few key aspects but remains the same otherwise. The first one is safety. Instead of being pointy they are rounded off at the edges. Secondly, the colour. They are a lot more vibrant than a normal pair of scissors. Themes commonly found in products for this target group can be gender specific. Agenda's for example, the boys have racing cars or sports agenda while girls are more likely to have agenda's with horses or fashion. In these cases products can be an extension of their identity. Thus, it is important to steer away from very specific topics such as soccer or volleyball. It has to appeal to everybody regardless of personal interests. The chosen print doesn't adhere to one specific thing but remains abstract. Using vibrant colours and basic shapes the playfulness is achieved.

Figure 61 Print on the case panels

Slipcover
A valuable addition could be a custom picture on the front or top panel. Using a transparent slipcover the students can slide their own creations behind to personalize the tablet case. A class photo can be printed out and put on the front panel for example. This gives the students an extra way of interacting with the case and making the product truly theirs.

Feel
Not only the look but also the feel plays an important role. The material of the ribs are made from a soft rubber. This cushions any blows to the case. It not only protects the devices it also influences the behaviour of the students. If the ribs were made out of a hard material the fit would be a lot more important. The soft rubber can contract and form around the device. When a device is placed it is constantly under a slight tension from the rubber. The user can place the device inside the case carelessly. The student does not have to focus so much on inserting it precisely.

6.3. CONCLUSION

The aim of this reflection was to focus on the human-product interaction because it was lacking in the main report. In this reflection the most important interactions with the product are described. Not only what happens but also who does it and the idea behind it. The case has to quickly supply the entire classroom with tablets so interaction has to be smooth and quick. The unplug-and-forget style cable holder enforces this aim. When it is time to pack up it is also important that it happens fast and correct. The cable holder presents the cables so the students themselves are encouraged to plug them back in. The case has a two stage telescopic handle so that teachers and students can carry the tablets around the school.

The design of the case was also elaborated. The choices made were clarified but also a possible addition which allows the students to personalize the case.

References

1. Hulshof Business Cases.
http://www.hulshofcases.nl/over-ons.
Retrieved April 14, 2015

2. Editors PC Mag.
http://www.pcmag.com/encyclopedia/term/52520/tablet-computer.
Retrieved May 22, 2015

3. Editors Webopedia.
http://www.webopedia.com/TERM/C/chromebook.html.
Retrieved May 22, 2015

4. Editors Kennisnet.
http://www.kennisnet.nl/fileadmin/contentelementen/kennisnet/Dossier_Laptops/augustus_2014_Opvallende_resultaten_Onderwijs_met_eigen_device.pdf.
Retrieved May 26, 2015

5. Meijer, J., Emmelot, Y.,Felix, C., & Karssen, M. (2014).
Gebruik van tablets in de school.
Amsterdam: Kohnstamm Instituut.
(Rapport 916, projectnummer 40628)

6. Heemskerk, I., Meijer, J., Van Eck, E., Volman, M., Karssen, M., & Kuiper, E. (2011).
Experimenteren met ict in het PO.
Amsterdam: Kohnstamm Instituut.

7. https://www.pinterest.com/doeskefermin/topklas-mijn-onderwijs-praktijk/.
Retrieved April 22, 2015

8. Editors e-Waste guide
http://ewasteguide.info/e_waste_definition.
Retrieved May 26, 2015

9. http://en.wikipedia.org/wiki/USB#Mini_and_micro_connectors.
Retrieved May 17, 2015

10. Brando.
https://usb.brando.com/usb-3-1-type-c-female-to-microusb-male-cable_p12380c0032d015.html.
Retrieved May 27, 2015

11. Henderson, S. & Yeow, J. (2012).
iPad in Education: A case study of iPad adoption and use in a primary school.
System Science (HICSS), 2012 45th Hawaii International Conference on (pp. 78-87).
IEEE.

12. Editors Millennium@EDU.
http://millenniumedu.org/model-classroom-2/.
Retrieved 11 May, 2015

13. Roschelle, J., Tatar, D., Chaudhury, S. R., Dimitriadis, Y., Patton, C., & DiGiano, C. (2007).
Ink, improvisation, and interactive engagement: learning with tablets.
Computer, 40 (9), 38-44. doi:10.1109/MC.2007.321.

14. Goh, M.
http://www.chargespot.com/news/2015/03/state-of-wireless-charging-the-present-and-the-future/.
Retrieved May 27, 2015

15. Nitz Engineering GMBH.
http://www.qinside.biz/en/support/qi-enabled-phones-2015.
Retrieved 27 May, 2015

16. Steinmetz, Dr. Charles Proteus (1914).
Elementary Lectures on Electric Discharges, Waves, and Impulses, and Other Transients (2nd ed.).
McGraw-Hill.

17. Noemedia.
http://www.noemedia.at/files/technologie/BeInteractive_Katalog_Fruehjahr_2014Teil1.pdf
Retrieved 24 April, 2015

18. Lapcabby.
http://www.lapcabby.com/products/tabcabby-tablet-computer-trolleys/tabcabby-charge-and-sync/.
Retrieved 24 April, 2015

19. Moore, G. E., (1965)
Cramming more components onto integrated circuits.
Electronics Magazine, p.4.

20. http://en.wikipedia.org/wiki/Comparison_of_tablet_computers.
Retrieved 4 May, 2015

21. Editors PC Mag.
http://www.pcmag.com/encyclopedia/term/64815/phablet.
Retrieved 29 May, 2015

22. Schmitz, M.
http://elearningindustry.com/importance-of-responsive-design-in-online- education.
Retrieved 28 May, 2015.

23. IDC. (2014).
Worldwide Tablet Growth Forecast to Slow as New and Replacement Purchases in Mature Markets Begin to Level Off, According to IDC.
Retrieved from http://www.idc.com/getdoc.jsp?containerId=prUS24716914 2 June, 2015

24. Gartner. (2015).
Gartner Says Worldwide Chromebook Sales Will Reach 7.3 Million Units in 2015.
Retrieved from http://www.gartner.com/newsroom/id/3058517 2 June, 2015

25. Euston, J.
http://flurrymobile.tumblr.com/post/117769261810/the-phablet-revolution?utm_source=mixx.io&utm_medium=newsletter.
Retrieved 28 May, 2015

26. Editors PC Mag.
http://www.pcmag.com/encyclopedia/term/63893/hybrid-laptop.
Retrieved 29 May, 2015.

27. Bonnington, C.
Choose the Right Charger and Power Your Gadgets Properly.
http://www.wired.com/2013/12/charging-devices-faq/.
Retrieved 1 June, 2015

28. Karwowski, Waldemar, and William S. Marras, eds.
The occupational ergonomics handbook. p.410 Crc Press, 1998.

29. Dorrestijn,Steven (2011)
Gedragsbeïnvloedende techniek en usability.
Tijdschrift voor ergonomie, 36 (1). pp. 5-12. ISSN 0921-4348

30. DINED Anthropometric database,
http://dined.io.tudelft.nl/en, kima1993

Appendix A – Plan of action

Ontwerp van opbergsysteem voor elektronisch lesmateriaal

plan van aanpak

Joerie te Grotenhuis
j.tegrotenhuis@student.utwente.nl
s1372319

Opdrachtgever *Hulshof business cases* en belanghebbenden

De opdrachtgever is Hulshof business cases in Lichtenvoorde. Hulshof is een Achterhoeks familiebedrijf, opgericht in 1918. Hulshof is begonnen als leerlooierij. Hulshof Leder en Metaal, de naam die altijd nog op de gevel staat, herinnert aan deze begintijd. De volgende stap was het produceren van koffers. Het begon met hutkoffers in de jaren vijftig en ging over op reiskoffers vanaf de jaren zestig. Tegenwoordig richt Hulshof zich op de flexwerkers en mobiele werkers. Deze koffers zijn voorzien van bijvoorbeeld een notebook en printer of andere apparatuur[1].

Hulshof is een kop-staart bedrijf dat productie vooral lokaal houdt. Het aanbod bestaat uit een breed scala aan oplossingen dankzij de samenwerkingsverbanden met gespecialiseerde leveranciers. Het assortiment is onder te verdelen in drie categorieën; “techniek & inspectie”, “dienstverlening” en “onderwijs & training”[2]. De eerste categorie is een serie koffers voor medewerkers die zich dagelijks bezighouden met installatiewerkzaamheden, inspecties of keuringen. Vaak is er ook geen vaste werkplek. Hiervoor biedt Hulshof stevige en robuuste koffers die bescherming bieden aan de apparatuur. De tweede categorie is gericht op de moderne kantoormedewerker en is in lijn met het Nieuwe Werken. Deze “Flexkoffers[3]” zijn voorzien van een beamer of andere zakelijke benodigdheden. De laatste categorie, en waar deze bachelor opdracht onder valt, bestaat uit een serie koffers die worden ingezet bij het onderwijs, cursussen en trainingen. In het moderne onderwijs waarbij technologie in het klaslokaal wordt gebruikt ontstaat er een vraag naar opberg- en oplaadmogelijkheden. Daarnaast kan het zijn dat de apparatuur gesynchroniseerd moet worden.

Mocht een standaardproduct niet de oplossing bieden dan kan er ook maatwerk geleverd worden. Het bedrijfsmotto is: Kan niet? Mooi wel!

Aanleiding

Hulshof ziet kansen om haar marktpositie te versterken op het gebied van opbergoplossingen voor in het onderwijs. Hiervoor zijn al twee oplossingen bedacht en uitgewerkt. De één biedt ruimte voor tablets met een oplaadingang aan de lange zijde (bijvoorbeeld Samsung), de andere is ontworpen voor tablets met een oplaadingang aan de korte zijde (bijvoorbeeld Apple). Voor het opladen zijn deze koffers voorzien van stekkerdoos. Dit is een eenvoudige oplossing maar waarschijnlijk niet de meest optimale oplossing. Een stekkerdoos voorzien van losse adapters neemt vrij veel ruimte in. Dit staat haaks op de wens om een compacte koffer te kunnen aanbieden. De stekkerdoos is wel weggewerkt achter een paneel dat niet toegankelijk is voor de dagelijkse gebruiker (leerling, docent). Hulshof rekent zichzelf op dit moment ergens tussen de “knutselaar” en de “echte aanbieder”. Er zijn dus nog kansen voor verbeteringen.

Hulshof is al enkele maanden bezig met het in kaart brengen van de markt en informatie omtrent concurrerende producten. Dit heeft echter nog niet de geleid tot een programma van eisen en er zijn nog een aantal vraagstukken die nog onbeantwoord zijn.

Het voornaamste probleem is het uiteenlopende aanbod van tablets en netbooks. De afmetingen van verschillende varianten kunnen sterk uiteenlopen. Daarnaast kan het zijn dat ze voorzien zijn van een beschermhoesje waardoor de apparatuur een stuk dikker wordt. Bovendien is deze tak van technologie onderhevig aan veel veranderingen in korte tijd. Er is vraag naar een opbergoplossing die kan voldoen aan deze grote diversiteit aan formaten. Maatwerk is de huidige oplossing maar is vanwege de kosten niet wenselijk.

Het aantal tablets of netbooks dat er in één koffer moeten passen is ook nog niet gespecifieerd. Hulshof heeft klanten in meerdere landen in Europa en er is verschil in klassengrootte en andere onderwijs-technische aspecten tussen deze landen.

Doelstelling

Het doel van deze bacheloropdracht is het leveren van één (of meerdere) ontwerpvoorstel(len) voor het opbergen van elektronisch lesmateriaal. De opdrachtgever heeft al informatie vergaard over het toekomstige product maar is nog niet in staat een programma van eisen op te stellen. Hiervoor moet nog aanvullend onderzoek worden gedaan.

Deze informatie zal vergaard worden aan de hand van de volgende analyses:

- Analyse van toekomstige ontwikkelingen op het gebied van elektronisch lesmateriaal
- Analyse van het gebruik elektronisch lesmateriaal in het klaslokaal
- Analyse van oplaadmogelijkheden van meerdere apparaten tegelijkertijd
- Analyse van synchronisatie mogelijkheden

Met de informatie van deze analyses en reeds verkregen informatie kan een programma van eisen worden gemaakt. Vanuit de opdrachtgever zijn er al wel enkele dingen vast gezet:

- De koffer moet tablets, netbooks of chromebooks veilig kunnen opbergen
- De doelgroep is de bovenbouw van de basisschool, zowel de leerlingen als de leraren
- De koffer moet alle apparatuur gelijktijdig kunnen laden
- De koffer moet gemakkelijk verplaatsbaar zijn

De opdrachtgever geeft aan dat het zich niet richt op notebooks of grotere formaten.

Resultaten zullen worden vastgelegd in een verslag. De analyses, schetsen, concepten en verdere illustraties zullen hierin beschreven worden. Het tijdsbestek voor deze opdracht is 3 maanden.

Vraagstelling

1. Wat is de optimale opbergkoffer voor elektronisch lesmateriaal?
   1.1 Wat is de ideale balans tussen enerzijds gewicht en anderzijds hoeveelheid tablets?
   1.2 Welke formaten moeten opgeborgen worden?
   1.3 Op welke manieren kan het apparaat worden opgeborgen?
   1.4 Hoe zal de koffer verplaatst worden?

2. Wat zijn de toekomstige ontwikkelingen van elektronisch lesmateriaal?
   2.1 Welk formaten kunnen worden verwacht over enkele jaren?
   2.2 Op welke manier zal toekomstig elektronisch lesmateriaal worden opgeladen?
   2.3 Op welke manier zal toekomstig elektronisch lesmateriaal worden gesynchroniseerd?
   2.4 Hoe zal het onderwijs m.b.t. ICT de komende jaren veranderen?

3. Hoe werkt de klas met elektronisch lesmateriaal?
   3.1 Heeft iedere leerling een eigen apparaat? Of één per tweetal/groep?
   3.2 Hoe kan ervoor worden gezorgd dat de apparaten altijd opgeladen worden?
   3.3 Wat moet de leraar kunnen met het elektronische lesmateriaal?

4. Welke vorm- en kleurkenmerken hebben producten in het klaslokaal?
   4.1 Hoe vertaalt zich dit naar een koffer?
   4.2 Zijn deze vormkenmerken ook te vertalen naar een veilige koffer?

De vraagstelling zal zich gaande weg uitbreiden.

Begrippen

Elektronisch lesmateriaal	Hulshof beschouwt tablets, netbooks en chromebooks als de op te bergen producten.
Stekkerdoos	Doos met meerdere aansluitpunten voor adapters.
Klaslokaal	Ruimte waarin de doelgroep het product voornamelijk zal gebruiken.
Doelgroep	Leerlingen (8-12 jaar) en leraren van de bovenbouw van de basisschool.

Strategie

Voor het uitvoeren van de analyses zal grotendeels gedaan worden door middel van deskresearch. Het opzetten, uitvoeren en interpreteren van veldonderzoek levert vaak waardevolle informatie maar is tijdrovend. Bovendien zal veel informatie over het onderwijs per land verschillen. Daarnaast is er al informatie vergaard en dit hoeft slechts aangevuld te worden om te kunnen starten met ontwerpen.

Het ontwerpproces zal volgens iteratieve stappen van divergeren en convergeren gedaan worden.

Bronnen

Hulshof

1 Over Hulshof
http://www.hulshofcases.nl/over-ons
Auteur: Hulshof Business Cases
Laatst geraadpleegd op 14 april 2015

Hulshof

2 Hulshof producten
http://www.hulshofcases.nl/standaardoplossingen
Auteur: Hulshof Business Cases
Laatst geraadpleegd op 14 april 2015

Hulshof

3 Hulshof Dienstverlening
http://www.hulshofcases.nl/product-categorie/dienstverlening-nl
Auteur: Hulshof Business Cases
Laatst geraadpleegd op 14 april 2013

Planning

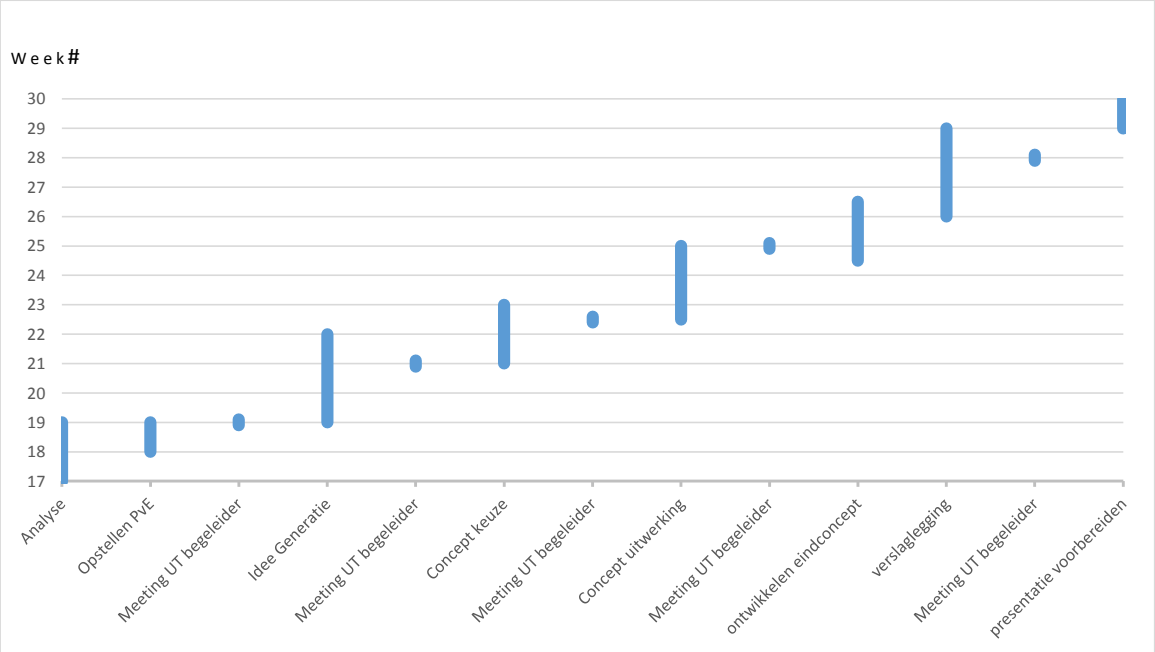

Appendix B – Collages & scenario

1. Products found in the classroom

2. Classrooms using tablets

Scenario primary school student

Profile
Name: Tim
Gender: male
Age: 9
Nationality: Dutch
Grade: 5th grade (Groep 7 in the Netherlands)
Hobbies: LEGO, football, mountain biking

Tim is a student at the Wilhelminaschool in Lichtenvoorde. After a pilot year Tim and his classmates get to work with tablets in the classroom. The class starts just as usual with some grammar lessons. Next subject is math. For this course tablets are used.

Week tasks are assigned to students such as feeding the fish or other little tasks. Every week these tasks are reassigned to other students. Tim's week task is to bring the tablets into the classroom. Grade four just finished working with the tablets. Tim heads over to that classroom and finds the tablet case. It houses tablets for an entire classroom. However, the transport system makes it very easy for Tim to bring it back to his classmates. Tim plugs in the power cable and opens up the case. The students can pick up the tablets in pairs one by one. This is done to prevent every student rushing to tablet case at the same time. When it is Tim's turn he walks up to the case, unplugs the USB cord, and picks up a tablet. The tablets are already booted up but the teacher disconnected the internet. The teacher gives instructions on the interactive white board and works out a couple of examples in class. Afterwards, the teacher unlocks the tablet and Tim can log in. Tim answers all questions and submits them so the teacher can look at the results. After 45 minutes the teacher discusses answers with the students. After the discussion the students put the tablet back into the tablet case.

The school bell rings and that means it's recess. The teacher checks if all tablets are stored correctly. If that's the case everybody can go. The teacher unplugs the tablet case and transports it to the teacher's lounge. He plugs in the power cord for a quick charge. The tablets are ready for the next classroom. At the end of the day the tablet case is also stored here. The last teacher locks the door behind him.

Appendix C – Overview of competitors

product	image	type	link	#	charging	sync	transport	external size	weight*	price**
KlasseMobil (i)S7 / Klasse Mobil		Ipad Android tablet	#1 #2	7	yes	yes	top handle, shoulder belt	450x340x220 34 litre	5,5 kg	€1200
KlasseMobil (i)S16 (S24, S32		Ipad android tablet (tailor made for other brands)	#1 #2	16 24 32 custom	yes	yes	2 linear wheels w/ telescopic handle 2 side handels	690x290x390 78 litre 790x290x390 89 litre 690x290x460 92 litre	15 kg 17 kg 21 kg	€1400*** €2350 €1700*** €3500 €2150*** €4300

* empty weight (no devices) ** price including VAT/BTW *** price for variant without synchronisation ability

Comments: Adding a synchronisation ability almost doubles the price.

Unique selling points MIT Klasse:

- KlasseMobil can offer tailor made products. The trolleys (S16,S24,S32) are the three outer casing options. Interior foam can be made suitable for every configuration and tablet size using CNC milling.

product	image	type	#	charging	sync	transport	external size	weight*	price**	€/device
Paraproject case i16		Ipad	16 + a laptop	yes	yes	4 swivel wheels w/ telescopic handle 2 side handles	710x395x477 133 litre	15 kg	€1850	€115
Paraproject case N10/N16		notebook (N10) *or* android/ windows tablet (N16)	10 laptop 16 tablet	yes	no	4 swivel wheels w/ telescopic handle 2 side handles	710x395x477 133 litre	14 kg	€1500	€150 per laptop €95

* empty weight (no devices) ** price including VAT/BTW

Comments: Both Paraproject cases have the same outer case.

Unique selling points Parat:

- Parat cases include Paraconnect (optional) adapter. This adapter is configurable which means it can be used by almost any notebook, now and future notebooks. Paraconnect cannot be used with tablets.
- Hight mobility, each case has four wheels which allow for easy transport.

Strong points -- *(not unique to Parat but does add extra value)*
Extra space for a macbook/notebook and an Airport Extreme (Wi-Fi router). *Side note: Using an Airport Extreme would make cabled synchronisation obsolete assuming the school has the right software and know-how??*

product	image	type	#	charging	sync	transport	external size	weight*	price**	€/device
NoteCase Amsterdam, Leba	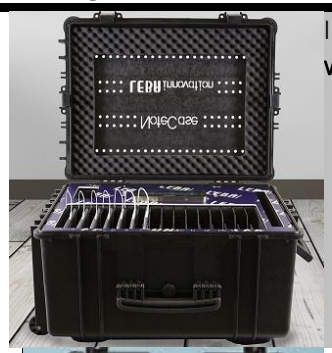	Ipads & tablets **with cover**	16 + a laptop	yes	yes	2 linear wheels w/ telescopic handle top handle	670x372x510 127 litre	10,5 kg	€2000	€125
NoteCase Madrid, Leba		Ipads & tablets	15	yes	yes	2 linear wheels w/ telescopic handle top handle	538x269x406 59 litre	5,7 kg	€1650	€110
NoteCase Berlin, Leba		Ipad mini & mini tablet **with cover**	15	yes	yes	2 linear wheels w/ telescopic handle top handle	627x292x475 87 litre	10 kg	€1600	€ 106 per mini

* empty weight (no devices) ** price including VAT/BTW

product	image	type	#	charging	sync	transport	external size	weight*	price**	€/device
NoteCase Paris, Leba		Ipad mini & mini tablet	15	yes	yes	2 linear wheels w/ telescopic handle top handle	551x226x358 45 litre	5 kg	€1500	€100 per mini
NoteCase Tallin, Leba		Ipad mini & mini tablet	30	yes	yes	2 linear wheels w/ telescopic handle top handle	538x269x406 59 litre	5,7 kg	€2400	€80 per mini

* empty weight (no devices) ** price including VAT/BTW

Comments

There is a wide range of products but only 5 exterior case sizes . This implies Leba uses 5 moulds for their entire NoteCase range.

Unique selling points Leba:

- Some Leba cases have an extra security measure. When a tablet is removed from the charger without authorization a sound alarm will be activated
- (optional) LCD display for feedback/notification

Strong points -- *(not unique to Parat but does add extra value)*

Leba cases have a rugged solid design/look&feel. Additionally, Leba offers a wide range of products. By varying interior Leba offers 18 products using 5 exterior sizes.

product	image	type	#	charging	sync	transport	external size	weight*	price**	€/device
GoCabby, Lapcabby		Ipads & android tablets **with cover**	16 + a laptop	yes	yes	2 wheels w/ telescopic handle 2 side handles	795x565x400 180 litre	18 kg	€1450	€90
DeskCabby, Lapcabby		Ipads & android tablets **with cover**	12	yes	yes	2 side handles	496x398x330 65 litre	6 kg	€1050	€90
TabCabby 32V, Lapcabby		Ipads & android tablets **with cover**	32 (no case)	yes	yes	4 swivel wheels w/ 2 top handles	1010x556x705 400 litre	85 kg	€2100*** €4100	€65 €130
			20 (with case)						€2100*** €4100	€105 €205

* empty weight (no devices) ** price including VAT/BTW *** price for variant without synchronisation ability

Comments: Lapcabby's in general are quite large.

Unique selling points Lapcabby:

- Look&Feel specifically designed with the target group in mind

Strong points -- *(not unique to Lapcabby but does add extra value)*
Almost all models support tablets with a cover.

product	image	type	#	charging	sync	transport	external size	weight*	price**	€/device
iQ Travel Case 20, LocknCharge	 	Ipad Ipad air	20	yes, but charger has to be removed from case	yes	2 wheels w/ telescopic handle side handles	632x602x333 127 litre	13,5 kg	€2000	€100

* empty weight (no devices) ** price including VAT/BTW

Comments: The travel case is dust- and waterproof. Consequently, the charging/synchronizing unit has to be removed from the case while in use otherwise the case will overheat.
Unique points LocknCharge

- Case is dust- and waterproof

product	image	type	#	charging	sync	transport	external size	weight*	price**	€/device
Exocase CS 16, Multipad		Ipad Ipad air	16 + a laptop	yes	yes	2 wheels w/ telescopic handle	664x450x380 114 litre	14 kg	€1750	€110

* empty weight (no devices) ** price including VAT/BTW

Comments: The Exocase resembles the Hulshof Transport & Charge.

Product	image	type	#	charging	sync	transport	external size	weight*	price**	€/device
Syncase 16, Trifibre		Ipad android tablet	16 + a laptop	yes	yes	2 wheels w/ telescopic handle	687x528x366 130 litre	14 kg	€1500	€95

* empty weight (no devices) ** price including VAT/BTW

Comments: Trifibre uses a case from Leba and add their own interior. In terms of design language it does stand out. However, it is not marketed at (primary) schools.

Appendix D – Tablet thickness

Complete set of data used to make figure 6.

year	average	sample size	data										
2007	21,6	4	13	20	24	29,5							
2008	22,5	4	14	23,8	24	28							
2009	15,8	3	10,4	17	20								
2010	12,9	14	10	11,4	11,5	12	12	12	13	13,6	13,6	13,7	14
2011	12,3	37	7,6	7,9	8,3	8,6	8,6	8,8	8,8	9,7	10	10	10,5
2012	10,4	44	6,5	7,2	7,7	7,9	8	8,3	8,5	8,5	8,7	8,8	8,8
2013	10,2	26	6,9	7,4	7,5	7,5	7,8	7,9	8	8	8,2	8,2	8,2
2014	8,3	25	6,1	6,4	6,4	6,6	6,6	7	7,1	7,2	7,4	7,9	7,9

…continued	year	data										
	2010	14	14,7	15,5								
	2011	11	11,4	11,7	12	12,2	12,2	12,4	12,4	12,5	12,8	12,9
	2012	8,9	8,9	8,9	8,9	8,9	8,9	9	9,2	9,3	9,4	9,4
	2013	8,7	8,9	9	9,7	9,8	9,8	9,9	9,9	10,5	10,5	13,5
	2014	7,9	8	8,1	8,1	8,4	8,8	8,9	9,1	9,1	9,7	9,9

…continued	year	data										
	2011	13	13,3	13,3	13,7	13,8	13,9	14	14	14,5	14,7	15,7
	2012	9,4	9,7	9,7	9,9	10,2	10,2	10,3	10,5	10,5	10,6	10,9
	2013	16	16	19,5	19,5							
	2014	10,6	10,7	12,6								

…continued	year	data									
	2011	17	17,3	18,5							
	2012	11	11,4	11,5	11,9	11,9	12,7	12,7	15,4	18	29
	2013										
	2014										

Source[20]

Appendix E – USB hub overview

Tripp-lite 16-port USB charger
Charge and sync

Specifications:
16 USB ports met LED (2,4A * 5V = 12W per port)
1 computer sync port
1 firmware update port (future proofing)
integrated internal adaptor
~€300,-
475x240x44mm
http://www.tripplite.com/16-port-usb-iphone-ipad-sync-charging-hub~U280016RM/

Cambrionix power pad 15(S)
Charge and sync

Specifications:
15 USB ports (2,1A * 5,2V = 11W per port)
1 computer sync port (also for updating, future proof)
Requires external adaptor (FSP-180-AHAN1)
~€550,- (incl adapter)
165x72x42mm (excl adaptor)
http://www.cambrionix.com/products/powerpad15/

Sipolar 16-port
sync & charge

Specifications:
16 USB ports (0,5A * 5V = 2,5 W per port)
2 sync ports
requires external adaptor
~€80 (excl shipping)
180x122x28mm
http://sipolar.en.alibaba.com/product/1245151526-219872452/2014_Hot_product_usb_2_0_hub_with_

Sipolar 20-port
sync & charge

Specifications:
20 USB ports (1A * 5V = 5W per port)
2 sync ports
Integrated internal adaptor
~€80 (excl shipping)
180x150x65mm
http://sipolar.en.alibaba.com/product/60207509718-219389496/2015_Hot_Product_Aluminum_Shell_USB_HUB_20_Port_usb_2_0_hub.html

Sipolar 30-port
sync & charge

Specifications:
30 USB ports (2,1A * 5V = 10,5W per port)
1 sync port
requires additional adaptor
(Meanwell HRP-300-5 5V/60A)
~€170 / set (incl adaptor, excl shipping)
428x80x25mm (excl adaptor)

http://sipolar.en.alibaba.com/product/60151945006-800313520/High_Power_Tablet_Charging_Cart_for_Ipad_30_Port_USB_Charger_with_5V_2_1A.html

Orico 13-port

sync & charge

Specifications:
13 USB ports (1A * 5V = 5 W per port)
1 sync port
external adapter
~€65 (incl adapter)
260x50x50mm (excl adaptor)

http://nl.aliexpress.com/item/ORICO-A3H: Splitter-with-5V2-4A-5V1A-Charger/32327172679.html

Fasion USB Hub

sync & charge

Specifications:
16 USB ports (2,1 A * 5V = 10,5 W per port)
1 sync port
external adapter
~€160 (incl adapter)
180x125x25mm (excl adaptor)

Intelligent Charging. Stops charging when devices are full

http://szjtcc.en.alibaba.com/product/1219109450-205441007/Fasion_USB_Hub_Charge_and_Sync_16_port_HUB_USB_HUB_for_tablets.html

DIPO usb HUB

sync and charge

Specifications:
19 USB ports (2,1 A * 5V = 10,5 W per port)
1 sync port
internal adapter
~€160 (incl adapter)
340x180x120mm (**incl** adaptor)

http://nl.aliexpress.com/item/New-Hot-Selling-usb-hub-usb3-0-hubs-19-port-with-power-adapter-40A-can-transfer/32219472564.html

Overzicht

	#ports	sync	Power/ port	dimensions	Adapter	Price*	Shipping	USB
Tripp-lite	16	yes	**12 Watt**	475x240x44	Internal	€300	unknown	2.0
Cambrionix	15	optio nal	11 Watt	**165x72x42**	External (laptop adapter size)	**€550**** **€750**	€5	2.0
Sipolar 16	16	yes	**2,5 Watt**	180x122x28	External (Smartphone adapter size)	€80	€20 to Germany	2.0
Sipolar 20	20	yes	5 Watt	180x150x65	Internal	€80	€20 to Germany	2.0
Sipolar 30	**30**	yes	10,5 Watt	428x80x25	External (big)	€170	€20 to Germany	2.0
orico	**13**	yes	5 Watt	260x50x50	External (Smartphone adapter size)	**€65**	free	3.0
Fasion USB Hub	16	yes	10,5 Watt	180x125x25	External (big)	€160 (MOQ 100)	unknown	2.0
DIPO hub	19	Yes	10,5 Watt	340x180x120	Internal	€267	€41	3.0

*Includes external adaptor if needed ** Without synchronising ability

Appendix F – Layout configurations

Clearification

- Every configuration is displayed storing 4 device types
- The orange corners are the outlines for the volume that is needed for the case. Notice that most have a little extra headroom to accommodate for the cables that also need space.
- The semi-transparent half globes on each device depict where the USB ports are.
- All configurations are in rows. Only one slice of that row is displayed. Except for the last configuration. It is based on a case with drawers.

1st configuration – case layout. Samsung & Chromebook cords loop externally from compartment to PSU. Storage compartment is in front of PSU compartment

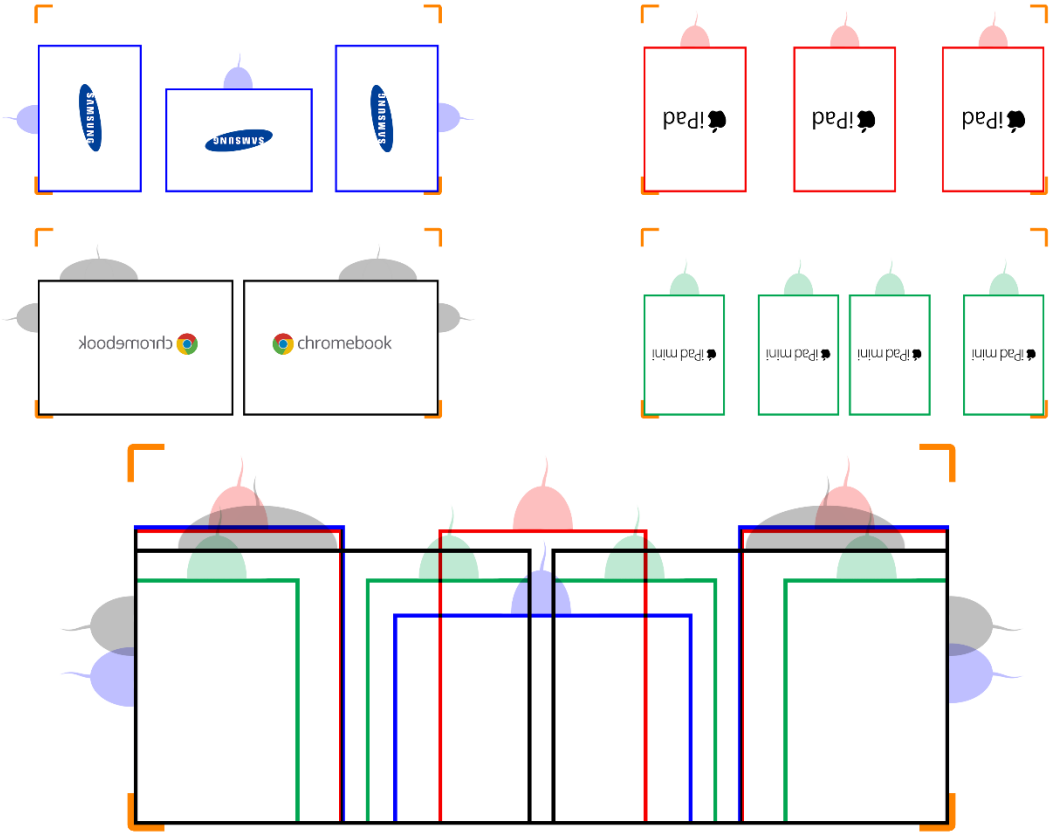

2nd configuration – case layout. Wedge insert for tablets with charge port on the short side(ipads). Every device has its charge port aimed towards the PSU. Power cables needed, therefore, are short. This is done to minimalize the chance of cables getting entangled.

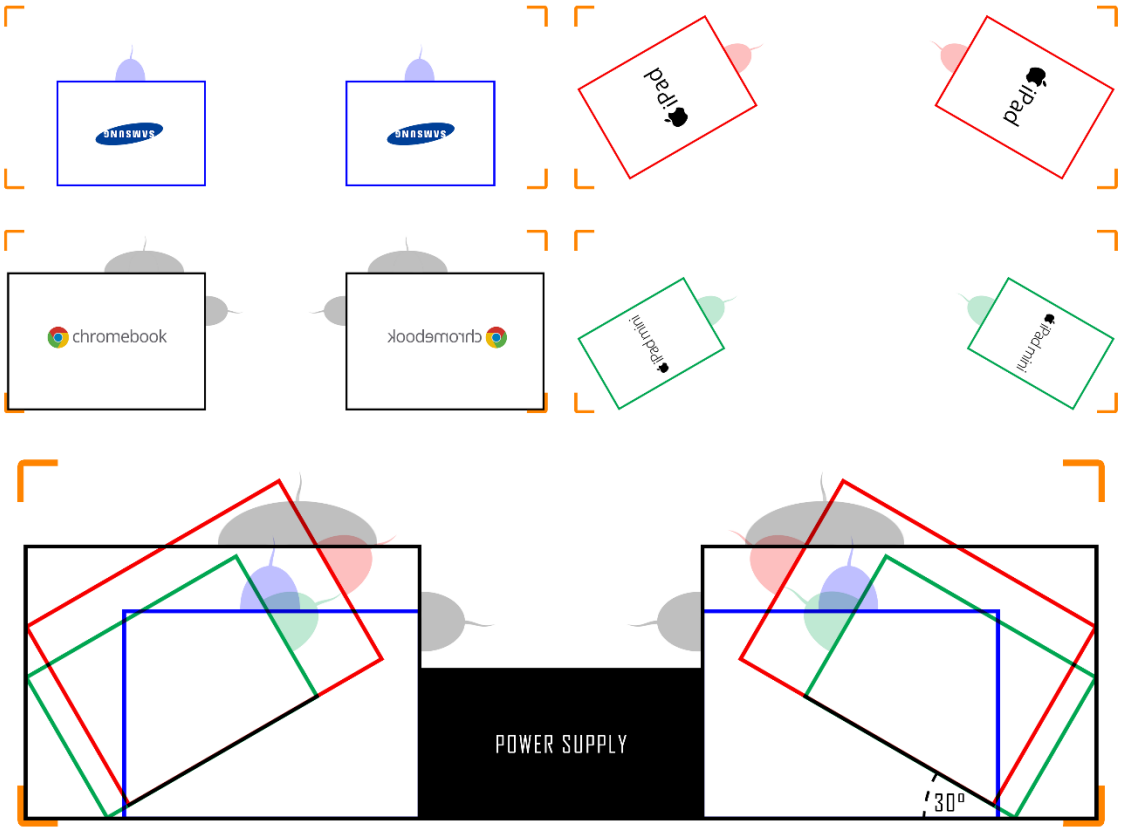

3rd configuration – case layout. Layout with more evenly distributed height, width and depth. This is done to make transport easier.

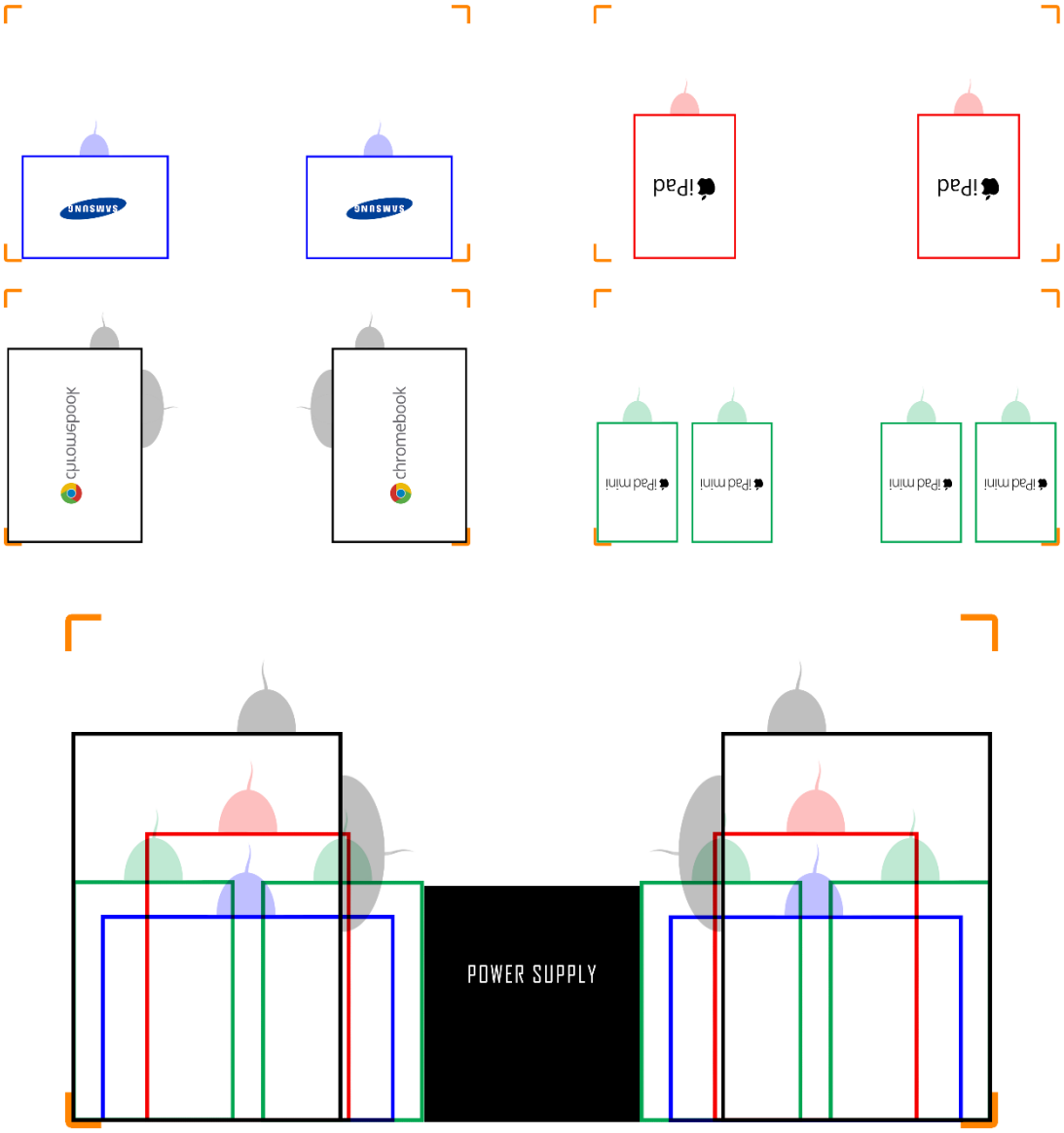

4th configuration – drawer layout. Devices are put on a horizontal platform. The USB ports are faced towards the user allowing for quickly plugging in and out the cables.

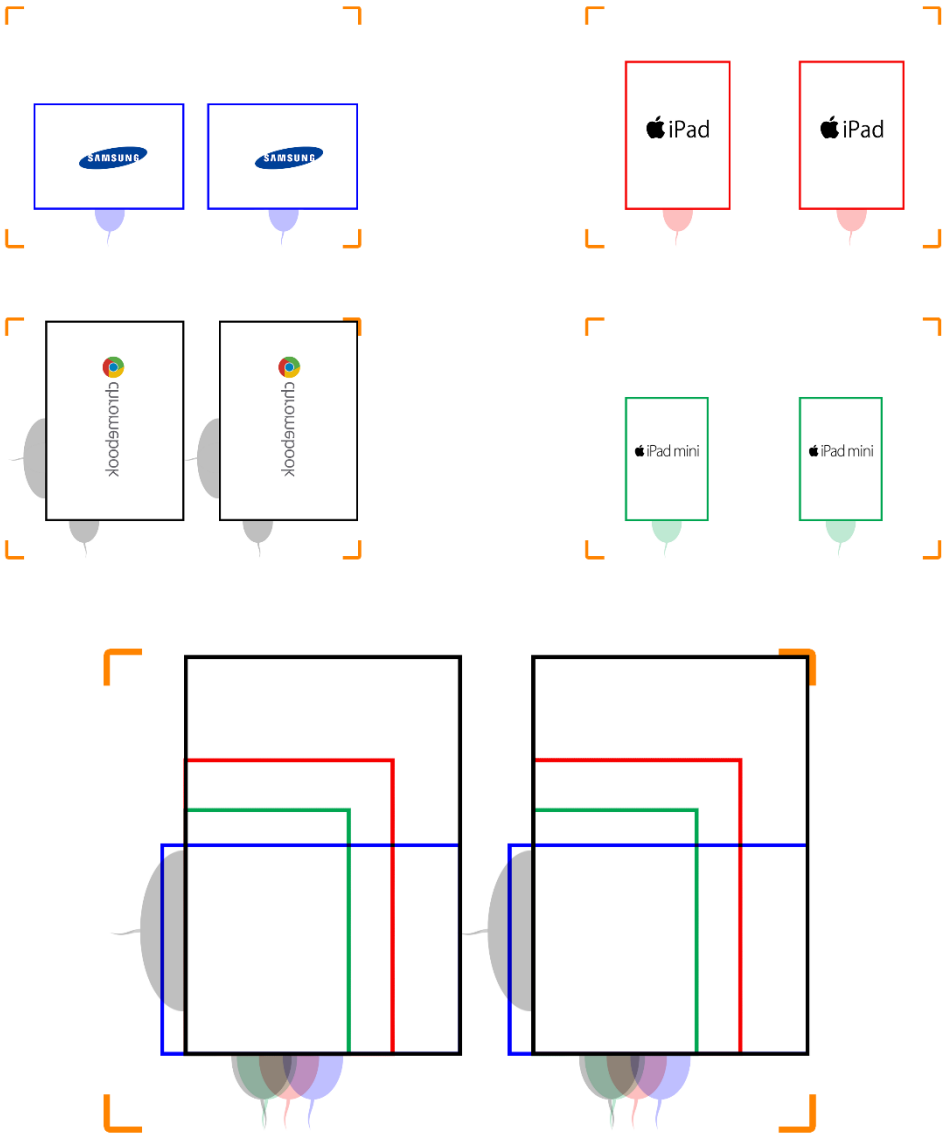

Appendix G – Morphologic analysis

Function	**1**	**2**	**3**	**4**
Store devices	Compartments out of divider plates	Compartments out of ribs	Custom made sleeves on every device. Sleeves slide onto slab inside case	
Store PSU (both device types)	In bottom compartment, cabling up through the sides	In back compartment, cabling from back to front	PSU sandwiched between compartments	PSU incorporated into lid/door
Plug in/out power cords	Devices partially protrude providing access to the charging port	Connector docks on the bottom. Devices stored with the charging port facing down.		
Present device to user	Devices partially protrude providing a surface to grip onto	Pulling cord which partly pops out devices from compartments	Drawer	
Synchronize tablets	Via integrated USB hub	Via Wi-Fi	Manually. One by one.	
Transport devices	4 Wheels and a handle	Trolley, 2 wheels + telescopic handle	Pull cart or “bolderkar”	Side handles for pick up
Secure devices	Pad lock which blocks access to devices	Ring and cable to lock case to environment	Always on GPS tracker	
Transport up/down stairs	Handle for picking up case	Stairclimber, tristar wheel		

Appendix H – Remaining idea sketches